Installation, Operating and Service Instructions for

X-2 TM

- Water Boiler
- Cast Iron
- Chimney Vent
- Gas Fired

Models:

- **X-202**
- **X-203**
- **X-204**
- **X-205**
- **X-206**
- **X-207**
- **X-208**
- **X-209**

Manual Contents **Page**

Dimensional and Physical Data 3
Pre-Installation. 5
Removing Existing Boiler 6
Unpack Boiler 6
Venting 7
Water Piping. 10
Gas Piping 13
Electrical. 14
System Start-Up and Checkout 18
Operation 23
Before Leaving Jobsite 27
Service and Maintenance 28
How It Works 32
Troubleshooting. 34
Service Parts 39
Appendix 46

ETL LISTED US
Intertek
9700609

ASME H

AHRI CERTIFIED®
www.ahridirectory.org

TO THE INSTALLER:

Affix these instructions adjacent to boiler.
Provide model number and serial number when seeking information and support.

TO THE CONSUMER:

Retain these instructions for future reference.
Contact heating contractor for all issues and support.

⚠ WARNING

Improper installation, adjustment, alteration, service, or maintenance can cause property damage, injury, or loss of life. For assistance or additional information, consult a qualified installer, service agency or gas supplier. Read these instructions carefully before installing.

106636-02 - 12/19

U.S. Boiler Company

The City of New York requires a Licensed Master Plumber supervise the installation of this product.

The Massachusetts Board of Plumbers and Gas Fitters has listed the X-2™ Series Boiler. See the Massachusetts Board of Plumbers and Gas Fitters website,

https://licensing.reg.state.ma.us/pubLic/pl_products/pb_product.asp for the latest Approval Code or ask your local Sales Representative.

The Commonwealth of Massachusetts requires this product to be installed by a licensed Plumber or Gas fitter.

The following terms are used throughout this manual to bring attention to the presence of hazards of various risk levels, or to important information concerning product life.

⚠ DANGER

Indicates a hazardous situation that, if not avoided, will result in death or serious injury.

⚠ CAUTION

Indicates a hazardous situation that, if not avoided, could result in minor or moderate injury.

⚠ WARNING

Indicates a hazardous situation that, if not avoided, could result in death or serious injury.

NOTICE: Indicates special instructions on installation, operation, or service which are important but not related to personal injury hazards.

⚠ DANGER

Explosion Hazard. DO NOT store or use gasoline or other flammable vapors or liquids in the vicinity of this or any other appliance.

If you smell gas vapors, DO NOT try to operate any appliance - DO NOT touch any electrical switch or use any phone in the building. Immediately, call the gas supplier from a remotely located phone. Follow the gas supplier's instructions or if the supplier is unavailable, contact the fire department.

⚠ WARNING

This boiler must only be serviced and repaired by skilled and experienced service technicians.

- If any controls are replaced, they must be replaced with identical models.
- Read, understand and follow all the instructions and warnings contained in all the sections of this manual.
- If any electrical wires are disconnected during service, clearly label the wires and assure that the wires are reconnected properly.
- Never jump out or bypass any safety or operating control or component of this boiler.
- Assure that all safety and operating controls and components are operating properly before placing the boiler back in service.
- Annually inspect all vent gaskets and replace any exhibiting damage or deterioration.

1 Dimensional and Physical Data

Table 1-1: Dimensions and Connections

Boiler Model	Depth	Width	Height	Supply NPT (inch)	Return NPT (inch)	Vent (inch)	Gas NPT (inch)	Relief Valve NPT (inch)	Drain NPT (inch)
X-202	32	14	40	1¼	1¼	4	½	¾	¾
X-203	32	14	40	1¼	1¼	4	½	¾	¾
X-204	32	16	40	1¼	1¼	5	½	¾	¾
X-205	32	19	40	1¼	1¼	6	½	¾	¾
X-206	32	22	40	1¼	1¼	6	½	¾	¾
X-207	32	25	40	1¼	1¼	7	¾	¾	¾
X-208	32	28	40	1¼	1¼	7	¾	¾	¾
X-209	32	31	40	1¼	1¼	8	¾	¾	¾

Table 1-2: Weights and Volume

Boiler Model	Input (MBH) (1)	Shipping Weight (lbs)	Empty Weight (lbs)	Water Content (gal)
X-202	38	202	143	1
X-203	70	254	180	2
X-204	105	304	231	3
X-205	140	357	284	4
X-206	175	405	332	5
X-207	210	462	382	6
X-208	245	518	438	7
X-209	280	564	484	8

(1) Input ratings can be used for elevations up to 2000 ft. Refer to System Start-up and Checkout Sections for elevations 2000 ft. or higher.

Electrical Requirements: 120VAC, 60 Hz, 1-ph, Less than 12A
Maximum Allowable Working Pressure - 50 psi. Boiler shipped from factory with a 30 psi safety relief valve.

1 Dimensional and Physical Data *(continued)*

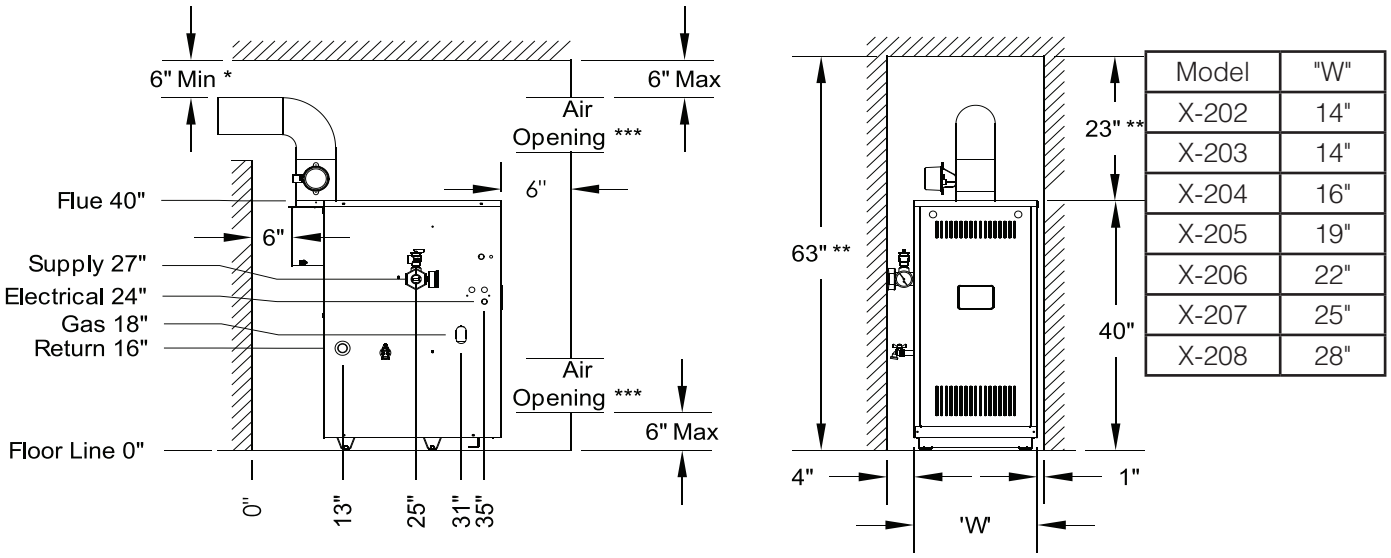

Model	"W"
X-202	14"
X-203	14"
X-204	16"
X-205	19"
X-206	22"
X-207	25"
X-208	28"

Figure 1-3: Minimum Closet Clearances

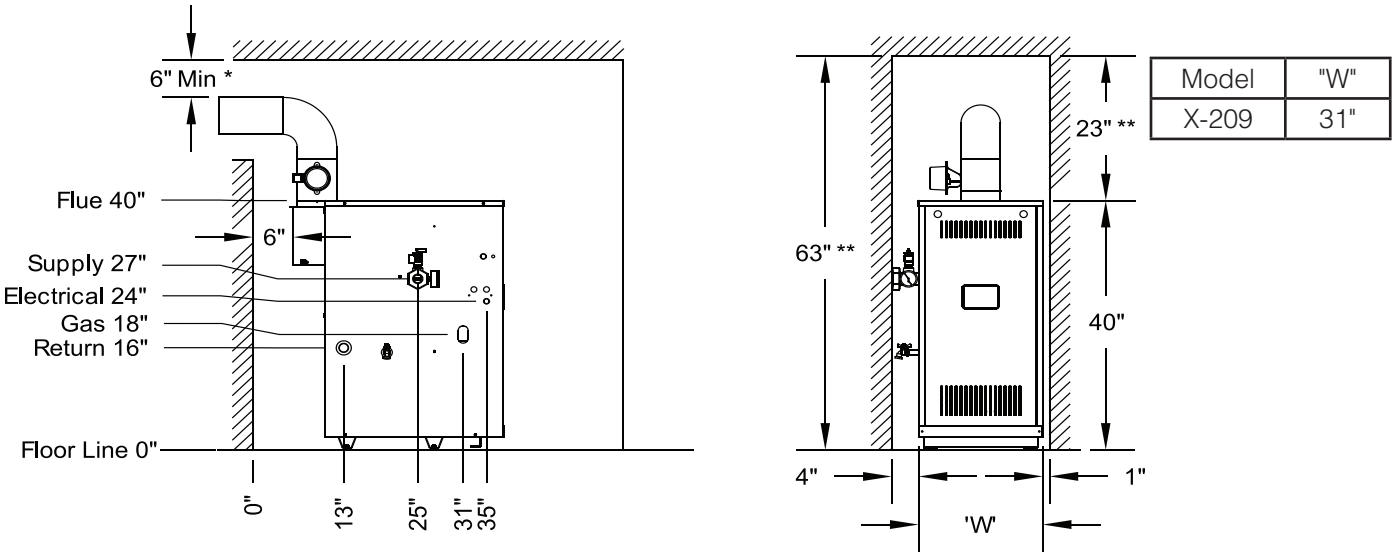

Model	"W"
X-209	31"

Figure 1-4: Minimum Alcove Clearances

* Minimum radial clearance around vent pipe and breeching for single-wall metal pipe vent connector. Otherwise, follow vent connector manufacturer's recommended clearances.

** Additional height required to maintain 6" clearance from all breeching components. Vent damper may be installed in vertical or horizontal section of vent connector within reach of vent damper harness.

*** Area of each opening to be 1 sq. inch for each 1000 BTU/hr input - with minimum of 100 sq. inches. Height of opening should be half of width. 3" minimum dimension for air openings.

2 Pre-Installation

⚠ WARNING

Carefully read all instructions before installing boiler. Failure to follow all instructions in proper order can cause personal injury or death.

A. Inspect shipment carefully for any signs of damage. All equipment is carefully manufactured, inspected and packed. Our responsibility ceases upon delivery of boiler to carrier in good condition. Any claim for damage or shortage in shipment must be filed immediately against carrier by consignee. No claims for variances or shortages will be allowed by Boiler Manufacturer, unless presented within sixty (60) days after receipt of equipment.

B. Installation must conform to the requirements of the authority having jurisdiction. In the absence of such requirements, installation must conform to National Fuel Gas Code, ANSI Z223.1/NFPA 54.

C. Appliance is listed for installation on combustible flooring. The boiler must not be installed on carpeting.

D. Provide clearance between boiler jacket and combustible material in accordance with local fire ordinance. Refer to Figures 1-3 and 1-4 for minimum clearance from combustible material. Provide 1/2" clearance from water piping to combustible materials.

E. Provide practical service clearances. A minimum of 24" from the left side and front jacket panels is recommended for servicing but may be reduced to minimums shown in Figures 1-3 and 1-4.

F. Install on level floor. For basement installation provide concrete base if floor is not level or if water may be encountered on floor around boiler.

⚠ WARNING

ASSURE THAT THE FRONT AIR DAM is in place and undamaged. A damaged front air dam will negatively affect the performance of this boiler, which can cause serious property damage, personal injury or death.

G. Protect gas ignition system components from water (dripping, spraying, rain, etc.) during boiler operation and service (circulator replacement, condensate trap, control replacement, etc.).

H. Provide combustion and ventilation air in accordance with the section "Air for Combustion and Ventilation," of the National Fuel Gas Code, ANSI Z223.1/NFPA 54, or applicable provisions of local building codes.

⚠ WARNING

Adequate combustion and ventilation air must be provided to assure proper combustion.

I. Do not install boiler where gasoline or other flammable vapors or liquids, or sources of hydrocarbons (i.e. bleaches, cleaners, chemicals, sprays, paint removers, fabric softeners, etc.) are used or stored.

J. Consider using boiler bypass described in Section 6 "Water Piping" for systems which have a large volume or excessive radiation where low boiler water temperatures may be encountered.

K. Where required by authority having jurisdiction, installation must conform to standard for Controls and Safety Devices for Automatically Fired Boilers, ANSI/ASME CSD-1.

L. A hot water boiler installed above radiation level or as required by the authority having jurisdiction must be provided with a low water cutoff device.

3 Removing Existing Boiler

A. If an Existing Boiler is Removed:

When an existing boiler is removed from a common venting system, the common venting system is likely to be too large for proper venting of the appliances remaining connected to it.

At the time of removal of an existing boiler, the following steps shall be followed with each appliance remaining connected to the common venting system placed in operation, while the other appliances remaining connected to the common venting system are not in operation:

1. Seal any unused openings in the common venting system.
2. Visually inspect the venting system for proper size and horizontal pitch and determine there is no blockage or restriction, leakage, corrosion, and other deficiencies which could cause an unsafe condition.
3. Insofar as is practical, close all building doors and windows and all doors between the space in which the appliances remaining connected to the common venting system are located and other spaces of the building. Turn on clothes dryers and any appliance not connected to the common venting system. Turn on any exhaust fans, such as range hoods and bathroom exhausts, so they will operate at maximum speed. Do not operate a summer exhaust fan. Close fireplace dampers.
4. Place in operation the appliance being inspected. Follow the Lighting (or Operating) Instructions. Adjust thermostat so appliance will operate continuously.
5. Test for spillage at the draft hood relief opening after 5 minutes of main burner operation. Use the flame of a match or candle, or smoke from a cigarette, cigar or pipe.
6. After it has been determined that each appliance remaining connected to the common venting system properly vents when tested as outlined above, return doors, windows, exhaust fans, fireplace dampers and any other gas-burning appliance to their previous condition of use.
7. Any improper operation of the common venting system should be corrected so the installation conforms with the *National Fuel Gas Code*, ANSI Z223.1/NFPA 54. When resizing any portion of the common venting system, the common venting system should be resized to approach the minimum size as determined using the appropriate tables in Chapter 13 of the *National Fuel Gas Code*, ANSI Z223.1/ NFPA 54.

4 Unpack Boiler

⚠ CAUTION

Do not drop boiler. Do not bump boiler jacket against floor.

A. Move boiler to approximate installed position.
B. Remove all crate fasteners.
C. Lift outside container and remove with all other inside protective spacers and bracing. Save two of the wooden slats from the container sleeve for use in Steps E and F.
D. Remove all boiler hold-down fasteners.
E. Tilt the boiler to one side and slide a wooden slat under the two raised feet.
F. Tilt the boiler to the other side and slide another wooden slat under the two raised feet.
G. Slide the boiler forward or backward off the skid using the two wooden slats as runners.
H. Move boiler to its permanent location.

5 Venting

A. Inspect chimney and remove any obstructions or restrictions. Clean chimney if previously used for solid or liquid fuel-burning appliances or fireplaces.

B. Locate blocked vent switch on boiler draft hood. Verify connections are made.

C. **Install Vent Damper**

OPEN THE VENT DAMPER CARTON and remove Installation Instructions. READ THE INSTALLATION INSTRUCTIONS THOROUGHLY before proceeding.

Automatic gas control valve supplied on each X-2 boiler provides redundancy referenced in vent damper Installation Instructions.

⚠ CAUTION

Do not use one vent damper to control two heating appliances.

1. Vent damper must be same size as outlet of draft hood supplied with boiler (see Table 1-1). Unpack damper carefully - DO NOT FORCE IT CLOSED! Forcing damper may damage motor and void warranty. Insert pilot vent plug into gate and fold over tabs.
2. Mount vent damper assembly onto draft hood. (Refer to Figure 5-1 and to instructions packed with vent damper for specific instructions). Do not modify either draft hood or vent damper.

NOTICE: Provide adequate clearance for servicing.

3. Locate vent damper position indicating means to be visible following installation.
4. Plug factory harness vent damper connector into damper motor polarized receptacle.

⚠ WARNING

Do not alter draft hood or place any obstruction or non listed damper in breeching or vent system. Flue gas spillage and carbon monoxide production can occur.

D. Install vent system in accordance with "Venting of Appliances" of the *National Fuel Gas Code,* ANSI Z223.1/NFPA 54, or applicable provisions of local building codes.

The X-2 Series boiler is a Category I, draft hood equipped appliance.

1. Type B or Type L gas vent. Install in accordance with listing and manufacturer's instructions.
2. Masonry or metal chimney. Build and install in accordance with local building codes; or local authority having jurisdiction; or *Standard for Chimneys, Fireplaces, Vents, and Solid Fuel Burning Appliances,* ANSI/ NFPA 211.

   Masonry chimney must be lined with listed clay flue lining or listed chimney lining system.
3. Single wall metal vent. Allowed by ANSI Z223.1/NFPA 54 under very restrictive conditions.
4. Do not use CPVC, PVC, Polypropylene or any other non-metallic vent pipe. Do not use cellular core PVC (ASTM F891), cellular core CPVC, or Radel® (polyphenolsulfone).
5. Do not cover non-metallic vent pipe and fittings with thermal insulation.

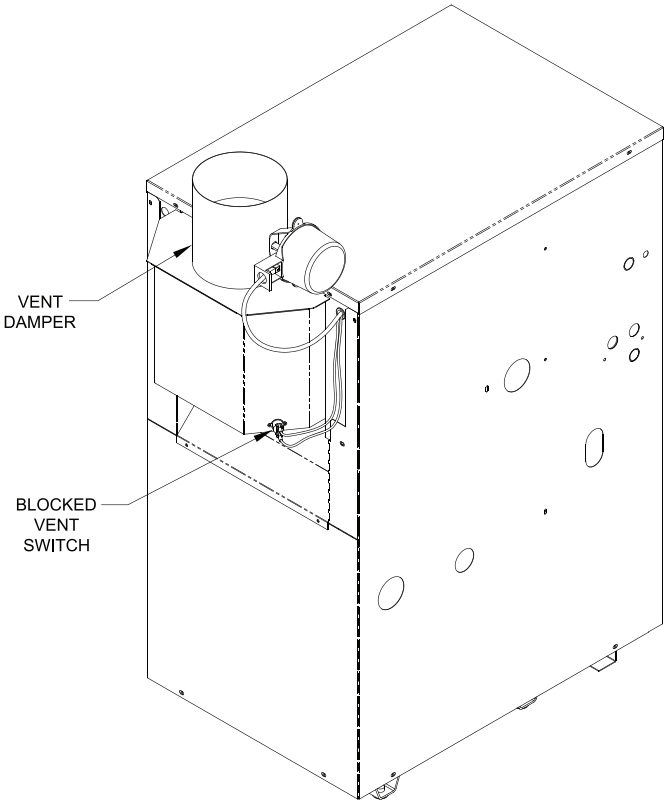

Figure 5-1: Vent Damper Installation

5 Venting *(continued)*

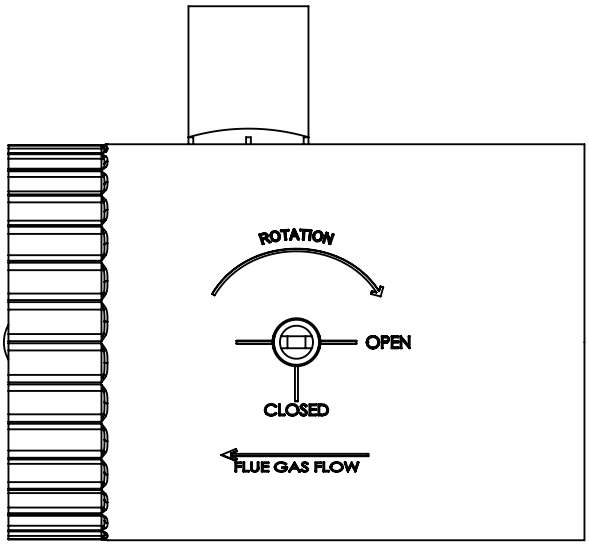

Figure 5-2: Vent Damper Position Indicator

E. Install Vent Piping

1. Install vent piping from vent damper outlet to chimney.
2. Vent pipes serving appliances vented by natural draft shall not be connected into any portion of mechanical draft systems operating under positive pressure.

⚠ DANGER

Inspect existing chimney before installing boiler. Look for corrosion holes. Failure to clean chimney or replace corroded pipe or tile lining will cause severe injury or death.

3. Do not connect into same flue of chimney serving an open fireplace.
4. Vent pipe to chimney must not be smaller than outlet on draft hood or vent damper. Arrange venting system so boiler is served by vent damper device.

   Exception: *National Fuel Gas Code*, ANSI Z223.1/NFPA 54, and allow vent downsizing when vent size determined by their Vent Sizing Tables is smaller than draft hood outlet/vent damper. These codes require all of following:

   a. Total vent height (H) is at least 10 ft;

   b. Vent not reduced more than one table size;

   and

   c. Draft hood outlet/vent damper is greater than 4 in. in diameter.
5. Vent pipe should have greatest possible initial rise above draft hood consistent with head room available and required clearance from adjacent combustible building structure. Vent pipe should be installed above bottom of chimney to prevent blockage.
6. Slope vent pipe upward from draft hood to vent terminal not less than 1/4" per foot.
7. Support horizontal portions of venting system to prevent sagging. Use pipe straps, brackets or hangers spaced 4 ft. or less.
8. Vent pipe must be inserted into but not beyond inside wall of chimney liner. Seal tight between vent pipe and chimney.

5 Venting *(continued)*

F. Install vent termination (Masonry chimney and single wall metal pipe)

1. Termination shall extend at least 5 ft. in vertical height above highest connected appliance vent outlet.
2. Termination shall extend at least 3 ft. (2 ft. for single wall metal pipe) above roof penetration and at least 2 ft. above any portion of building within horizontal distance of 10 ft.

G. Install vent termination: (Gas Vent)

1. Termination shall extend at least 5 ft. in vertical height above highest connected appliance vent outlet.
2. For terminations located at least 8 ft. from vertical wall or similar obstruction, termination shall extend above roof in accordance with Figure 5-3.
3. For terminations located less than 8 ft. from vertical wall or similar obstruction, termination shall extend at least 2 ft. above roof penetration and at least 2 ft. above any portion of building within horizontal distance of 10 ft.
4. Termination shall be at least 3 ft. above forced air inlet located within 10 ft.

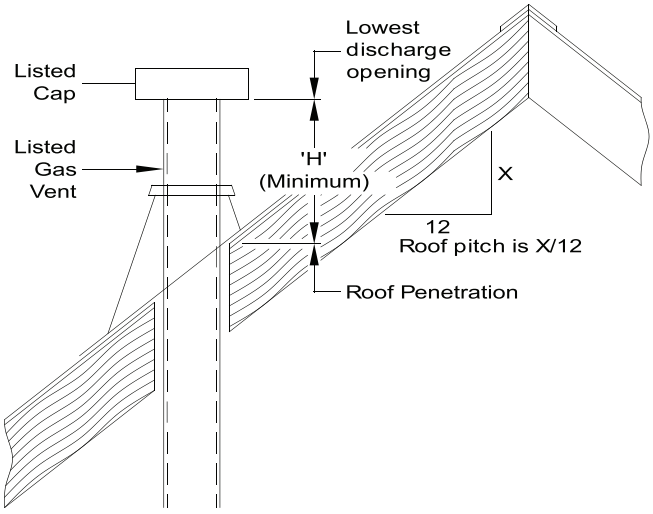

Figure 5-3: Termination Location for Gas Vent

Roof Slope Heights	
Roof Slope	ft.
Flat to 6/12	1.0
Over 6/12 to 7/12	1.25
Over 7/12 to 8/12	1.5
Over 8/12 to 9/12	2.0
Over 9/12 to 10/12	2.5
Over 10/12 to 11/12	3.25
Over 11/12 to 12/12	4.0
Over 12/12 to 14/12	5.0
Over 14/12 to 16/12	6.0
Over 16/12 to 18/12	7.0
Over 18/12 t 20/12	7.5
Over 20/12 to 21/12	8.0

6 Water Piping

⚠ WARNING

Failure to properly pipe boiler may result in improper operation and damage to boiler or building.

A. Design and install boiler and system piping to prevent oxygen contamination of boiler water.

Oxygen contamination sources are system leaks requiring addition of makeup water, fittings, and oxygen permeable materials in distribution system. Eliminate oxygen contamination by repairing system leaks, repairing fittings, and using non-permeable materials in distribution system.

B. Install circulator with flanges, gaskets and bolts provided.

C. Install Safety Relief Valve. See Figure 6-1. Safety Relief Valve must be installed with spindle in vertical position.

⚠ WARNING

Safety relief valve discharge piping must be piped near floor to eliminate potential of severe burns. Do not pipe in any area where freezing could occur. Do not install any shut-off valves between:
1. Safety relief valve and boiler
2. Safety relief valve and discharge
Union may be installed in safety relief valve piping.

D. Connect system supply and return piping to boiler. Refer to Figures 6-1, 6-2, and 6-3. Also consult Residential Hydronic Heating Installation and Design I=B=R Guide. Maintain minimum ½ inch clearance from hot water piping to combustible materials.

E. If boiler is used in connection with refrigeration systems, See Appendix: "Combination Refrigeration/Heating System".

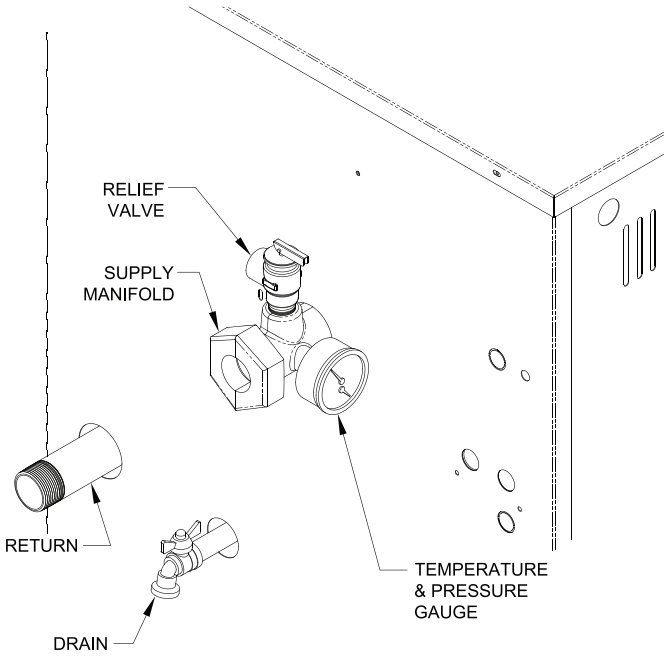

Figure 6-1: Near Boiler Piping

F. Use a boiler bypass if boiler is to be operated in a system which has a large volume or excessive radiation where low boiler water temperatures may be encountered (i.e. converted gravity circulation system, etc.). See Appendix: "Low Return Water Temperatures".

G. Perform a long term pressure test of hydronic system, isolate boiler to avoid a pressure loss due to escape of air trapped in boiler.

To perform a long term pressure test including the boiler, ALL trapped air must first be removed from the boiler.

A loss of pressure during such a test, with no visible water leakage, is an indication that the boiler contained trapped air.

6 Water Piping *(continued)*

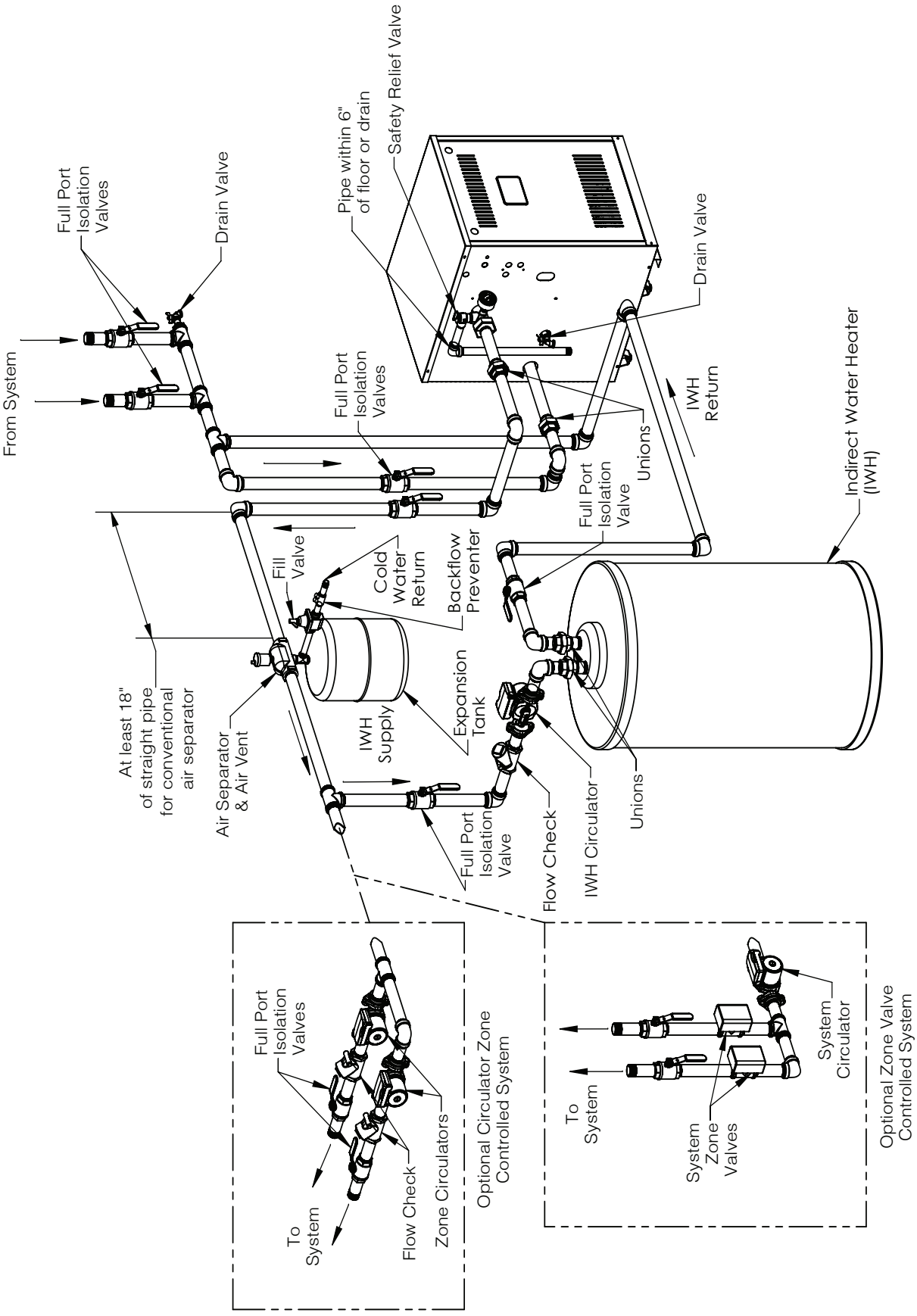

Figure 6-2: Recommended Water Piping for Direct Connection Systems

6 Water Piping *(continued)*

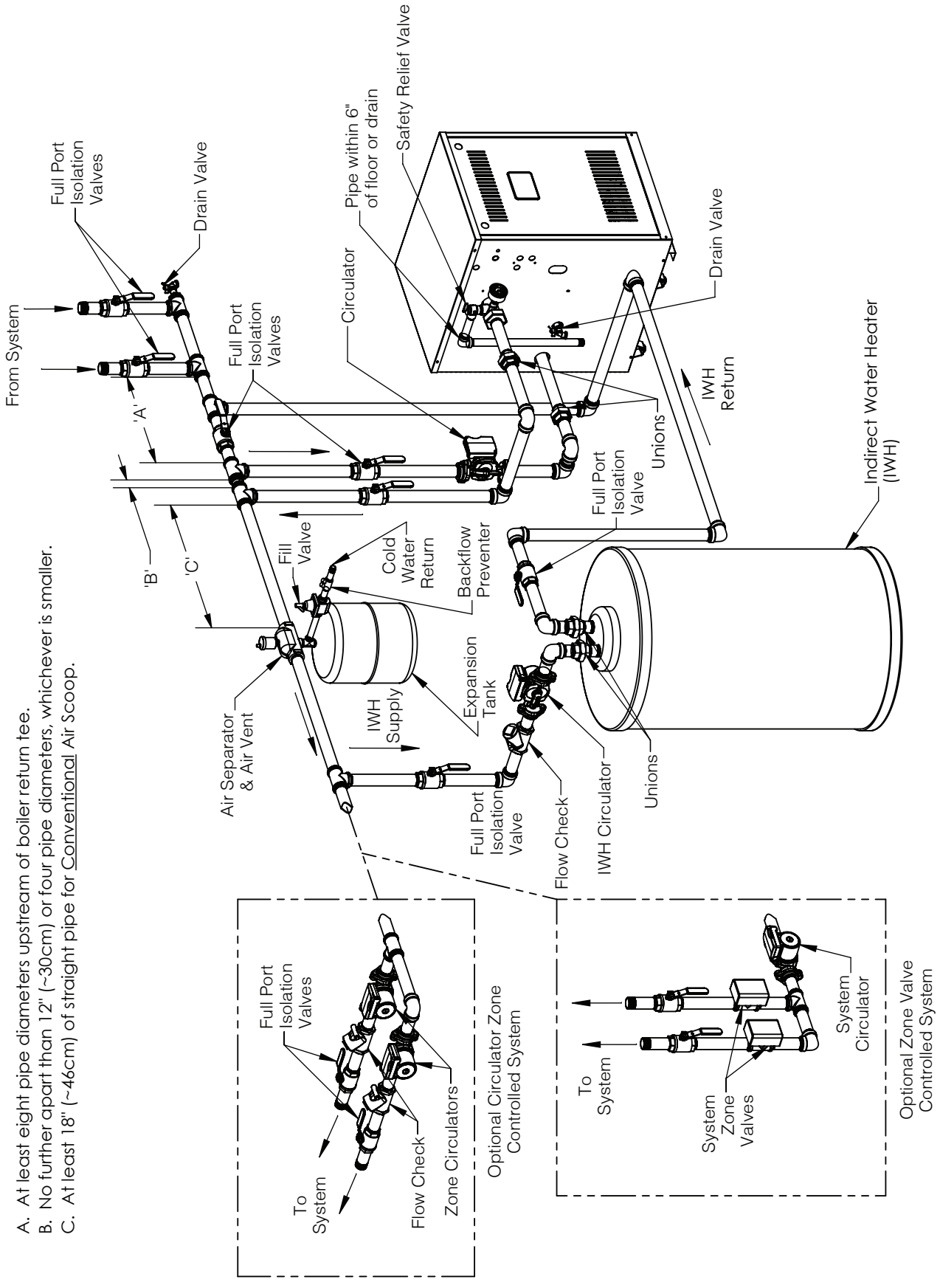

Figure 6-3: Recommended Water Piping for Primary/Secondary Systems

7 Gas Piping

A. Size gas piping. Design system to provide adequate gas supply to boiler. Consider these factors:

1. Allowable pressure drop from point of delivery to boiler. Maximum allowable system pressure is ½ psig. Minimum gas valve inlet pressure is listed on rating label. See Table 7-1.

Table 7-1: Gas Pressure

Natural Gas	Inlet Min (in w.c.)	Inlet Max (in w.c.)	Manifold (in w.c.)
All Sizes	4.5	14.0	3.5

LP Gas	Inlet Min (in w.c.)	Inlet Max (in w.c.)	Manifold (in w.c.)
All Sizes	11.0	14.0	10.0

2. Maximum gas demand. Consider existing and expected future gas utilization equipment (i.e. water heater, cooking equipment).

B. Connect boiler gas valve to gas supply system.

1. Use methods and materials in accordance with local plumbing codes and requirements of gas supplier. In absence of such requirements, follow *National Fuel Gas Code*, ANSI Z223.1/ NFPA 54.
2. Use thread compounds (pipe dope) resistant to action of liquefied petroleum gas.
3. Install sediment trap, ground-joint union and manual shut-off valve upstream of boiler gas control valve. See Figure 7-2 (within 6 ft of boiler).
4. All above ground gas piping upstream from manual shut-off valve must be electrically continuous and bonded to a grounding electrode. Do not use gas piping as grounding electrode. Refer to *National Electrical Code*, ANSI/NFPA 70.

C. Pressure test. Boiler and its gas connection must be leak tested before placing boiler in operation. See "System Start-Up and Checkout" section and "Gas Leak Test" for guidance.

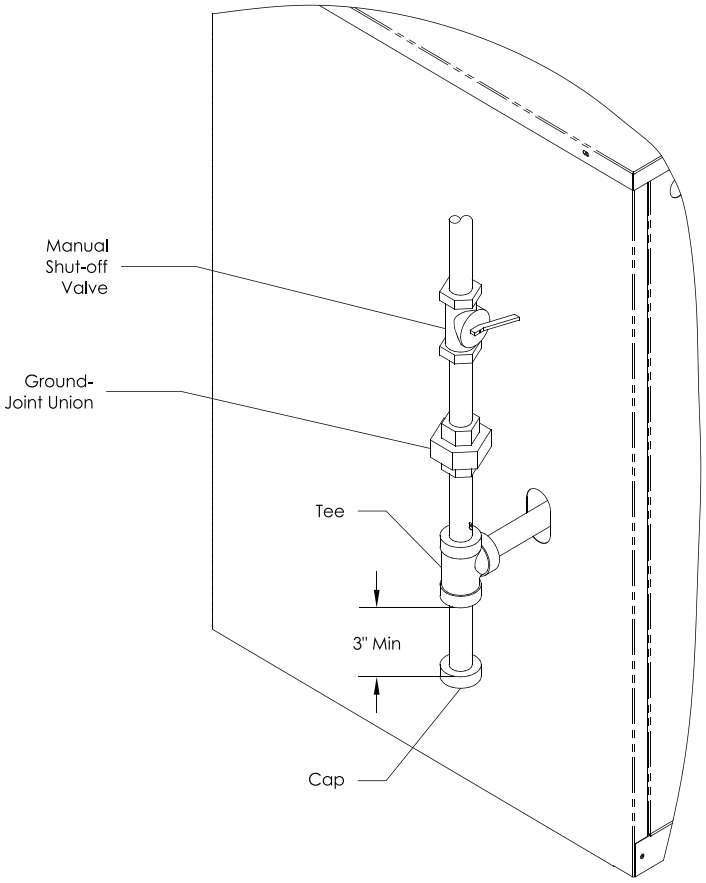

Figure 7-2: Pilot and Gas Piping

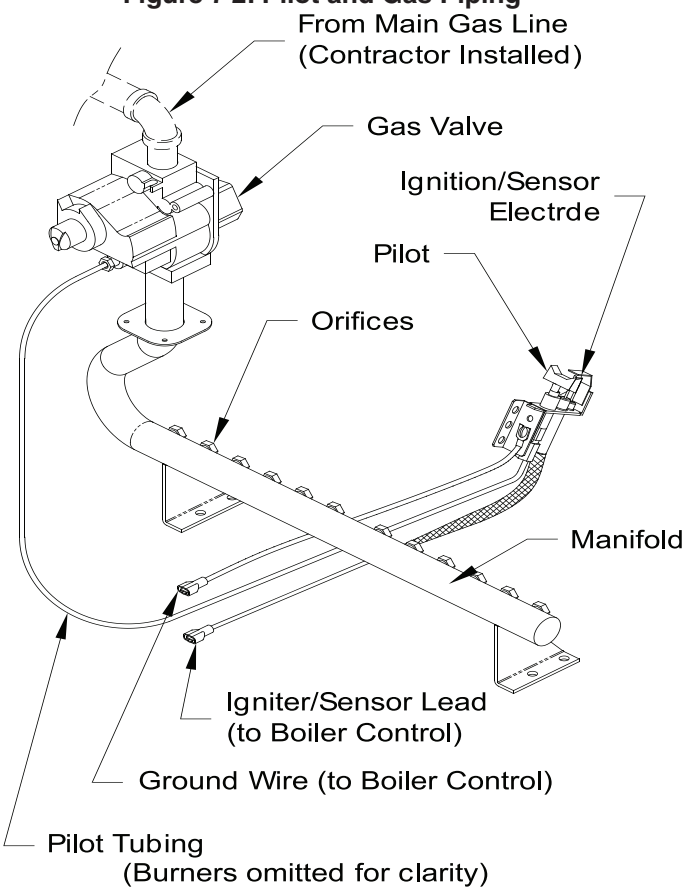

Figure 7-3: Gas Manifold and Control Assembly

8 Electrical

⚠ WARNING

Electrical Shock Hazard. Wiring errors can cause improper or dangerous operation. Verify proper operation after installation.

A. Install wiring so boiler is electrically bonded to ground in accordance with requirements of authority having jurisdiction, or in absence of such requirements, with the *National Electrical Code,* ANSI/NFPA 70.

B. Install thermostat. Locate on inside wall approximately 4 feet above floor. Do not install on outside wall, near fireplace, or where influenced by drafts or restricted air flow, hot or cold water pipes, lighting fixtures, television, or sunlight. Allow free air movement by avoiding placement of furniture near thermostat.

C. Wire boiler. Boiler is rated for 120 VAC, 60 hertz, less than 12 Amperes. A separate electrical circuit must be run from main electrical service with an over-current device/disconnect in circuit. A service switch is recommended and may be required by some local jurisdictions. Connect to black and white wires and green ground screw. See Figures 8-1 and 8-2.

D. For installations using zone valves, provide separate transformer for zone valve wiring. Consult zone valve manufacturer for assistance. See Figure 8-3.

⚠ CAUTION

This boiler contains controls which may cause the boiler to shut down and not restart without service. If damage due to frozen pipes is a possibility, heating system should not be left unattended in cold weather; or appropriate safeguards and alarms should be installed on heating system to prevent damage if boiler is inoperative.

8 Electrical *(continued)*

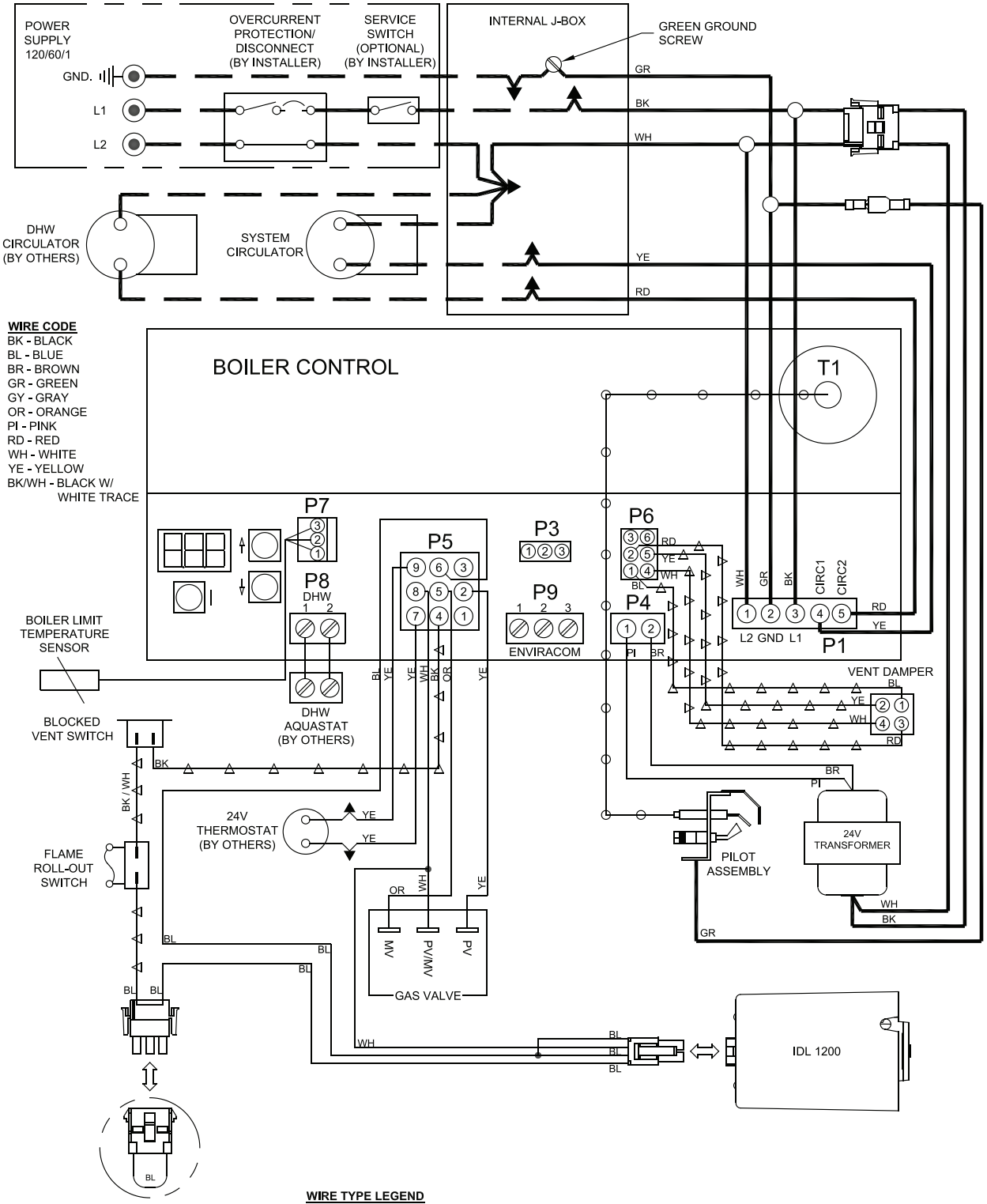

Figure 8-1: Wiring Connection Diagram

8 Electrical *(continued)*

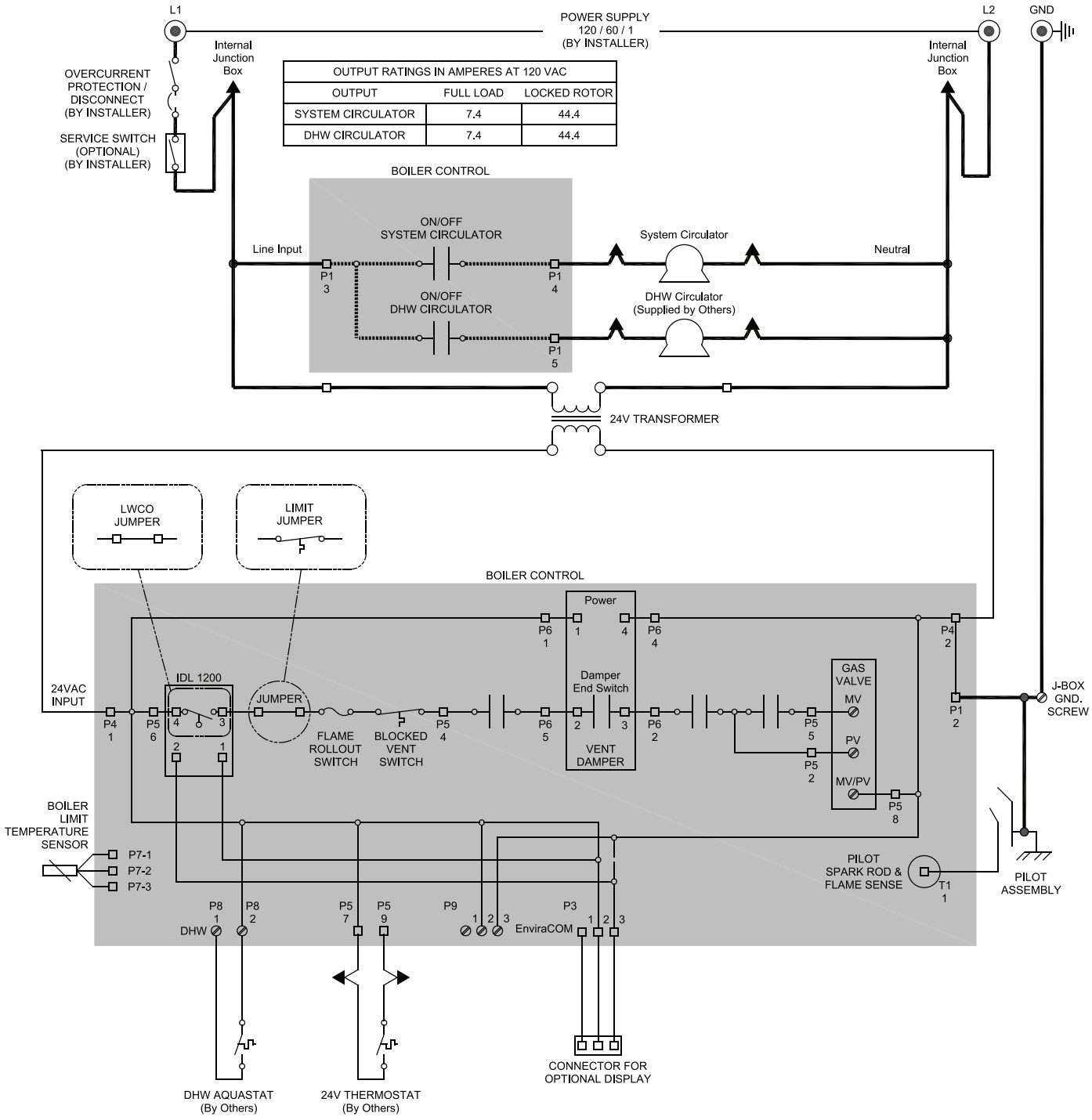

Figure 8-2: Schematic Ladder Diagram

8 Electrical *(continued)*

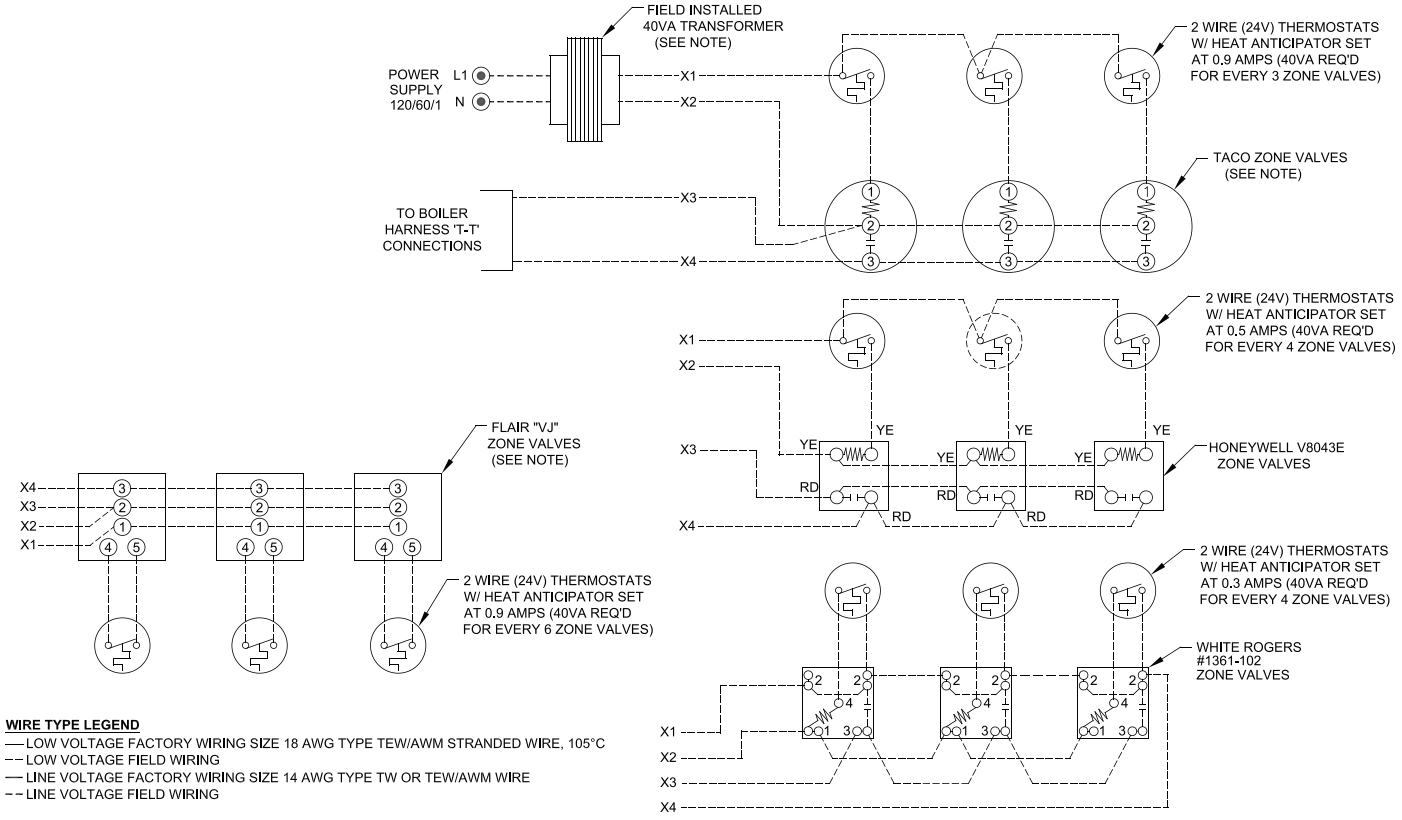

Figure 8-3: Wiring Schematic, Zone Valves

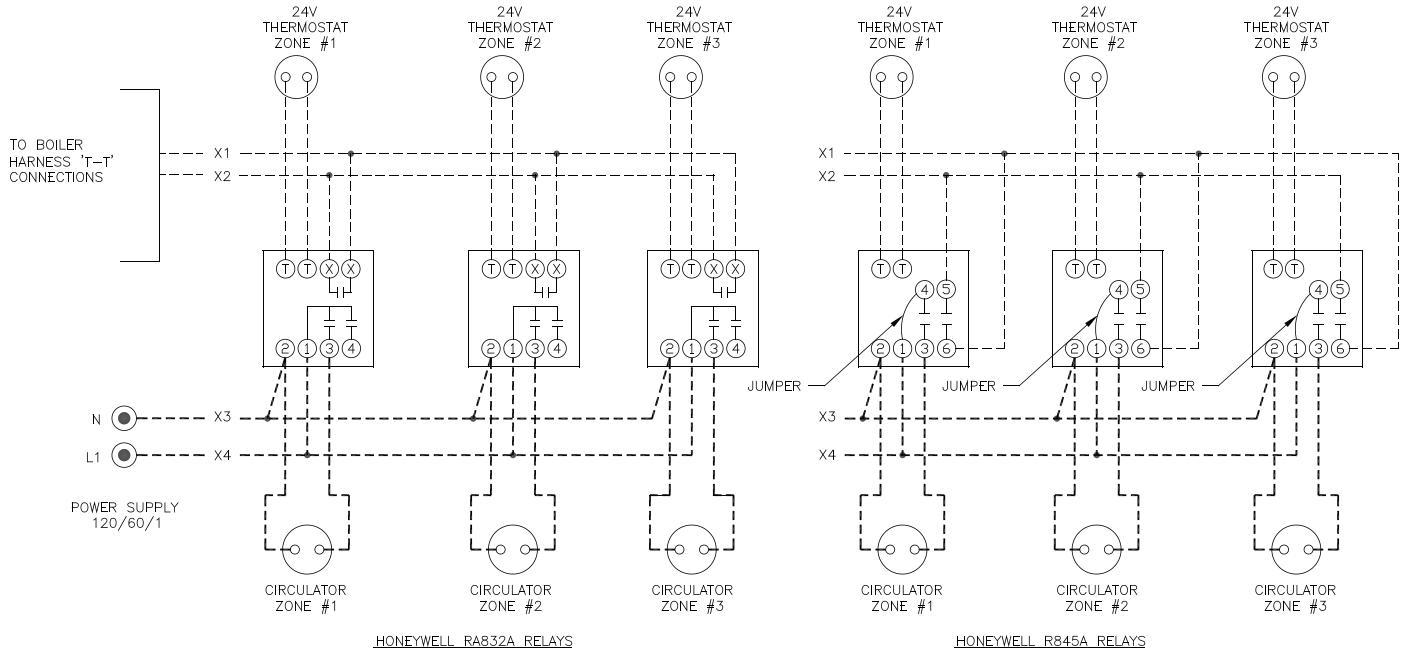

Figure 8-4: Wiring Schematic, Zone Circulators

9 System Start-up and Checkout

A. Visual Main Burner Check

Inspect burners for dislodgement during shipment. Rear of burners should be in vertical slots in rear of burner tray and front of burners should be seated completely on orifices.

B. Initial LWCO Test

Before filling boiler with water, turn on power to boiler and set thermostat to call for heat. Both the green "POWER" LED and amber "LOW WATER" LED should illuminate (see Figure 9-1). Burner should not fire.

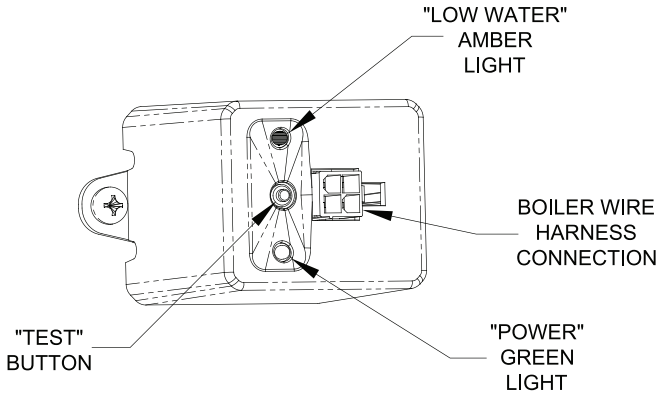

Figure 9-1: IDL 1200 Low Water Cut-Off

⚠ WARNING

If the burner fires with no water at probe, immediately shut down power to boiler and contact customer service for assistance.

C. Fill Boiler with Water

1. Proceed to fill boiler with water. When water reaches IDL 1200 Sensor, "LOW WATER" LED will turn off and burner will fire.
2. Turn off power to boiler and finish filling system.

D. Purge Air from System

1. Fill entire heating system with water and vent air from boiler, radiators and system, one zone at a time.
2. Isolate boiler by closing isolation valves. For primary - secondary systems, close additional isolation valve to ensure water flows through zones.
3. Isolate all circuits by closing zone valves or turning off zone circulators.
4. Attach hose to drain valve located on return piping (see Figure 6-2 and 6-3). Note-Terminate hose in five gallon bucket, at a suitable floor drain, or outdoor area).
5. Starting with one circuit, open zone valve or start circulator.
6. Open drain valve.
7. Open fill valve.
8. Allow water to flow through system until discharge from hose is bubble free for 30 seconds.
9. Open zone valve or start circulator to second zone to be purged, then close first. Repeat this step until all zones have been purged, but always have one zone open. At completion, open all zone valves.
10. Close hose bib, open boiler isolation valve, continue filling system until pressure gauge reads 12 psi. Close fill valve. (Note - If make-up water line is equipped with pressure reducing valve, system will automatically fill to 12 psi).
11. Remove hose from drain valve.

9 System Start-up and Checkout *(continued)*

FOR YOUR SAFETY READ BEFORE OPERATING

WARNING: If you do not follow these instructions exactly, a fire or explosion may result causing property damage, personal injury, or loss of life.

A. This appliance is equipped with an ignition device which automatically lights the pilot. Do not try to light the pilot by hand.

B. BEFORE OPERATING smell all around the appliance area for gas. Be sure to smell next to the floor because some gas is heavier than air and will settle on the floor.

WHAT TO DO IF YOU SMELL GAS
- Do not try to light any appliance.
- Do not touch any electric switch; do not use any phone in your building.
- Immediately call your gas supplier from a neighbor's phone. Follow the gas supplier's instructions.
- If you cannot reach your gas supplier, call the fire department.

C. Use only your hand to push in or turn the gas control knob. Never use tools. If the knob will not push in or turn by hand, don't try to repair it, call a qualified service technician. Force or attempted repair may result in a fire or explosion.

D. Do not use this appliance if any part has been under water. Immediately call a qualified service technician to inspect the appliance and to replace any part of the control system and any gas control which has been under water.

OPERATING INSTRUCTIONS

1. STOP! Read the safety information above on this label.
2. Set the thermostat to lowest setting.
3. Turn off all electric power to the appliance.
4. This appliance is equipped with an ignition device which automatically lights the pilot. Do not try to light the pilot by hand.
5. Remove front door.
6. Locate the gas control valve at the end of the gas supply pipe going into the boiler. The gas control knob is the brown or blue plastic knob located on top of the gas control valve.

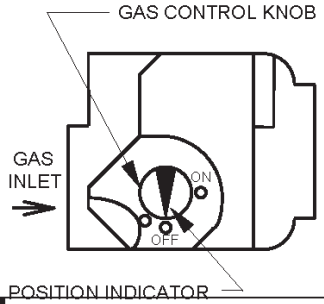

7. Rotate gas control knob clockwise from "ON" position to "OFF". Make sure knob rests against stop.
8. Wait five (5) minutes to clear out any gas. Then smell for gas, including near the floor. If you smell gas, STOP! Follow "B" in the safety information above on this label. If you do not smell gas, go to the next step.
9. Rotate gas control knob counterclockwise from "OFF" to "ON". Make sure knob rest against stop. Do not force.
10. Replace front door.
11. Turn on all electric power to the appliance.
12. Set thermostat to desired setting.
13. If the appliance will not operate, follow the instructions "TO TURN OFF GAS TO APPLIANCE" and call your service technician or gas supplier.

TO TURN OFF GAS TO APPLIANCE

1. Set the thermostat to lowest setting.
2. Turn off all electric power to the appliance if service is to be performed.
3. Remove front door.
4. Rotate gas control knob clockwise from "ON" position to "OFF". Make sure knob rests against stop.
5. Replace front door.

Figure 9-2: Operating Instructions

9 System Start-up and Checkout *(continued)*

E. Perform gas leak test upstream of boiler shutoff valve.

1. Protect boiler gas valve.
   a. For all testing over ½ psig, boiler and manual shutoff valve must be disconnected from gas supply piping.
   b. For testing at ½ psig or less, isolate boiler from gas supply piping by closing boiler manual shutoff valve.
2. Locate leaks using listed combustible gas detector, a noncorrosive leak detection fluid or other listed leak detection method.

⚠ DANGER

Do not use matches, candles, open flames, or other ignition source.

3. Tighten appropriate pipe connections.

F. Perform limit check

1. Ensure gas to boiler is off
2. Set ROOM THERMOSTAT to lowest setting.
3. If limits are functioning properly (LWCO, Auxiliary limit, flame rollout switch, blocked vent switch, damper), boiler should spark. If boiler does not spark, see Section 14 "Troubleshooting" for guidance.
4. Turn "OFF" the electric switch to boiler.

G. Start boiler according to "Operating Instructions" in Figure 9-2.

H. Perform gas leak test downstream of boiler manual shutoff valve.

1. Open manual shutoff valve.
2. PURGE AIR FROM GAS PIPING by loosening (or removing) "Inlet Pressure Tap" plug on gas valve (See Figure 9-3). Tighten (or replace) plug when you start to smell gas. Adequate ventilation must be provided and no smoking or open flame permitted.
3. Locate and address leaks using listed combustible gas detector, a non corrosive leak detection fluid or other listed leak detection method.
   a. Check pipe fittings up to inlet of gas valve
   b. Check piping between gas valve and orifices (after boiler is operating).
   c. Check piping between gas valve and pilot (after boiler is operating).
4. Tighten appropriate pipe connections.

I. Check pilot burner flame.

Natural Gas Only. Pilot produces single flame. Flame should be steady medium hard blue enveloping 3/8 to 1/2 inch of igniter-sensor tip. See Figure 9-4.

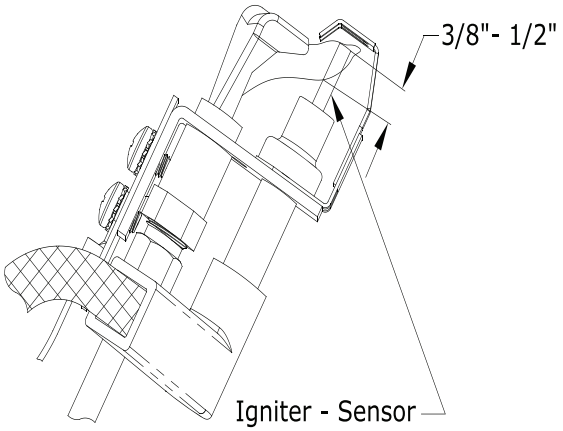

Figure 9-4: Pilot Burner Flame (NG Only)

LP Gas Only. Pilot burner produces three (3) flames. The center flame should be steady, medium hard blue enveloping 3/8 to 1/2 inch of sending probe. See Figure 9-5.

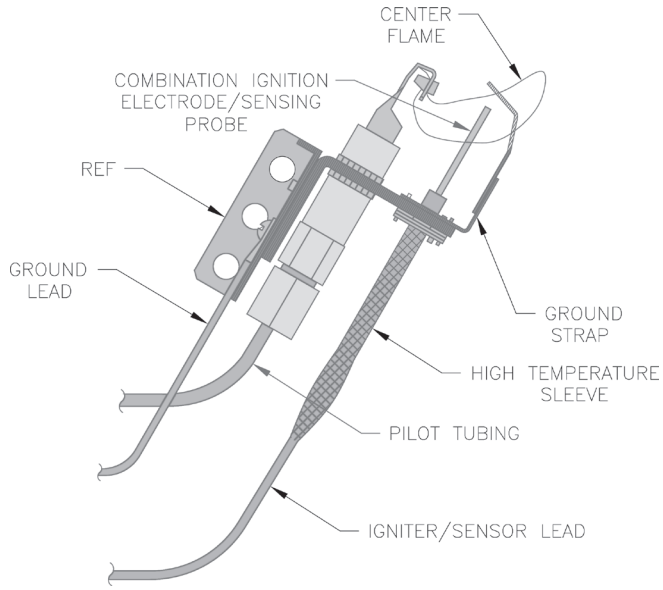

Figure 9-5: Pilot Burner Flame (LP Only)

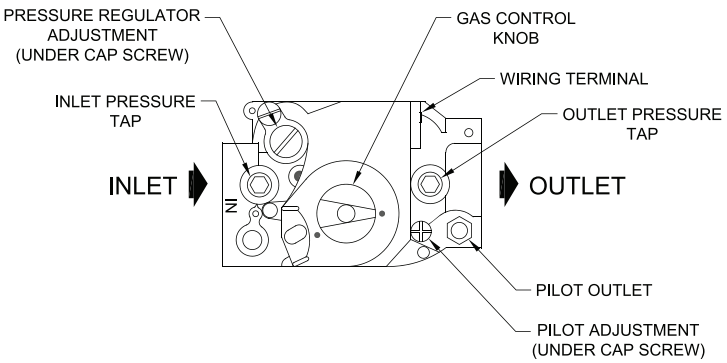

Figure 9-3: Top View of Gas Valves

9 System Start-up and Checkout *(continued)*

J. Check Main Burner Flame (see Figure 9-6)

1. NORMAL FLAME:
   a. Clearly defined inner cone with no yellow tipping.
   b. Orange-yellow streaks caused by dust should not be confused with true yellow tipping.
2. ABNORMAL FLAME (if found, check inlet and outlet gas pressure. Procedure found in following steps):
   a. Over fired - large flame
   b. Under fired - small flames
   c. Lack of primary air - yellow tipping on flames.

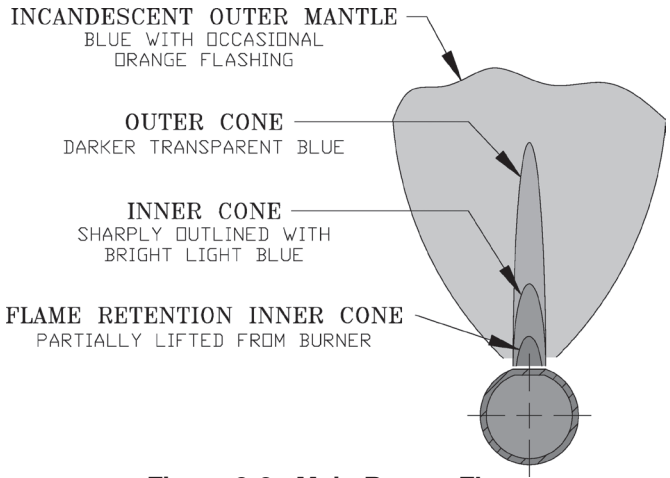

Figure 9-6: Main Burner Flame

⚠ CAUTION

Avoid operating boiler in an environment where saw dust, loose insulation fibers, dry wall dust, etc. are present. If boiler is operated under these conditions, burner interior and ports must be cleaned and inspected daily to ensure proper operation.

K. Check gas inlet pressure

1. While boiler and all other gas appliances are not firing, gas inlet pressure should not exceed ½ psig.
2. While boiler and all other gas appliances are firing, gas inlet pressure must be between minimum and maximum shown on rating label.

L. Check gas outlet (manifold) pressure

1. Install manometer on 1/8" outlet pressure tap on gas valve (see Figure 9-3). Use of shutoff valve between manometer and gas valve can prevent pressure surge that blows out manometer fluid.
2. Adjust regulator on gas valve so manifold pressure matches values listed on rating label.
3. Turning regulator adjustment screw clockwise (↻) increases pressure.
4. Turning regulator adjustment screw counterclockwise (↺) decreases pressure.

M. Check gas input rate to boiler

1. When checking rate, ensure all other appliances connected to same meter as boiler are off.
2. Input ratings shown on boiler rating label can be used for elevations up to 2,000 ft. For elevations 2,000 ft. or higher, reduce input rate to 4 percent per 1,000 ft. above sea level. Do not install at elevations above 12,000 ft. See Table below.

Input (MBH)				
Boiler Model	Rating Label	5,000 ft.	7,000 ft.	10,000 ft.
X-202	38	30.5	27.5	23
X-203	70	56	50	42
X-204	105	84	76	63
X-205	140	112	101	84
X-206	175	140	126	105
X-207	210	168	151	126
X-208	245	196	176	147
X-209	280	224	202	168

N. Measure carbon monoxide (CO) level in vent after 5 minutes of main burner operation. CO should not exceed 400ppm air free.

O. Check vent damper operation.

Vent damper must be in open position when appliance main burners are operating.

9 System Start-up and Checkout *(continued)*

P. Check ignition system safety shut-off device.

After control has finished sparking, remove ignitor/ flame sense wire from control. Burners will shut down.

Q. Test LWCO functionality

Press "TEST" button on IDL 1200. See Figure 9-1. Boiler should shut down.

- Set thermostat to call for heat and push “TEST” button on IDL 1200 to simulate low water condition.
- Amber “LOW WATER” LED will illuminate and burner will shut down.
- Release “TEST” button and burner will light off.

R. Check high limit control. (See Section 10 "Operation - High Limit" for details). Set thermostat to higher than normal setpoint. Allow boiler to run until high limit is achieved (180°F default). Burners will shut down.

S. Check thermostat operation. Raise and lower temperature setting to start and stop boiler operation. Adjust thermostat to normal setting.

T. Review User's Information Manual and system operation with owner or operator.

10 Operation

A. Boiler Sequence of Operation (See Table 10-1)

1. When thermostat calls for heat, control starts system circulator.
2. If thermostat is not satisfied with residual heat in boiler, or boiler water temperature is less than start temperature (140ºF) setpoint, start sequence continues by energizing vent damper. Once vent damper is fully open, ignition sequence is started. Damper must be in open position when appliance main burners are operating.
3. If thermostat is not satisfied and operating set point has been reached, system circulator will continue to operate and burners will stop. When boiler water temperature drops below setpoint less differential setting, burners will restart.
4. After thermostat is satisfied, burners and circulator are stopped and vent damper is closed.
5. When indirect water heater thermostat is wired to DHW input, aquastat calls for heat and control starts DHW circulator. Vent damper is energized without delay and ignitor sequence is started.

B. Boiler Fault

If boiler fails to start, control provides status information to help determine cause of problem. Table 10-2 provides a list of boiler status codes that are reported.

C. Using Display

Control is located inside boiler front door.

The control display, along with Up ↑, Down ↓, and "I" keys may be used to view boiler operating status (Figure 10-4).

Table 10-1: Sequence of Operation

Status Codes displayed in StA Mode		
Status	StA	Description
Standby (Burner off Circulator off)	1	No call for heat detected
Circulator Pre-purge (burner off circulator on)	1	Either condition is true: a. Call for heat detected and boiler temperature higher than operating setpoint. b. Call for heat detected and boiler temperature higher than Start Temperature (140°F default) and Circulator Pre-purge Time has not expired.
Self Test	17	Control internal checking
Drive Damper Open	18	Damper is energized. Control is waiting for damper switch to close. If damper end switch doesn't close within 60 seconds, control goes to StA 20
Pre-purge	4	Damper is open for a 2 second delay
Spark	6	Pilot fuel valve is open and sparking has started.
Flame Proving	7	Main fuel valve is open and flame is being proven.
Running	8	Burner runs until call for heat is satisfied or operating setpoint is reached.

Table 10-2: Sequence Fault

Status Codes displayed in StA Mode		
Status	StA	Description
Retry / Recycle Delay	10	If burner fails to light off (no flame signal), it waits 5 minutes and retries or if control loses flame signal during running, it will wait 10 seconds and then recycle.
Soft Lockout	13	System is shut down and will restart following a one hour enforced delay.
Hard Lockout	14	System is locked out. A manual or power reset is required to light off again.
Limit Open	15	There is a call for heat from thermostat, but Limit is open.
Flame Present Out of Sequence	16	Flame signal is still present when expected to be 0 (no flame).
Damper Failed to Open	20	Damper is still energized and damper end switch has not closed.

10 Operation *(continued)*

D. Viewing the Operating Mode Options

In operating mode, user may view (but not change) boiler operating status, settings and troubleshooting information.

For example, when "I" key is pressed on control until "bt" is displayed, it will then flash three digit number (such as "180") followed by "F" (or "C"). This indicates boiler water temperature is 180°F. Other operating parameters display information in similar fashion.

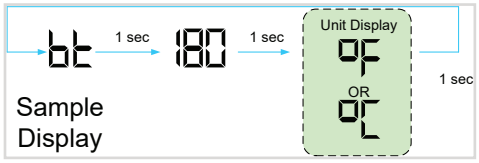

In order to view an instantaneous value, [i.e. instantaneous flame current.] User can press and hold either Up ↑ or Down ↓ key in operating mode

E. Changing the Adjustable Parameters

Adjustable parameters are listed in Table 10-3.

1. Access adjustable parameters by pressing and holding the Up ↑, Down ↓, and "I" keys simultaneously for three (3) seconds.
2. Press "I" key to display available adjustable parameters. Select an option.
3. Press Up ↑and Down ↓ keys to adjust displayed item to desired value.
4. To return to normal operating screen from adjustable parameters, when "bAc" option is displayed, press either Up ↑ or Down ↓ key. After five (5) minutes control will automatically return to operating mode.

Table 10-3

Adjustable Parameters			
	Default	Range	Description
HL_	180°F	140-220°F	Adjust High Limit Setting
dF_	15°F	10-30°F	Adjust High Limit Differential
Or_	0 min	0-10 minutes	Circulator Overrun Time
PP_	2 min	2-20 minutes	Circulator Pre-purge Time
St_	140°F	140-180°F	Start Temperature
Pt_	on	On or off	Priority time
dh_	dh	dh or tt2	DH Terminal Function
rSt	F		Reset Lockout
F-C	F	F or C	Select degrees F or C Mode
bAc			Back to Operating Mode

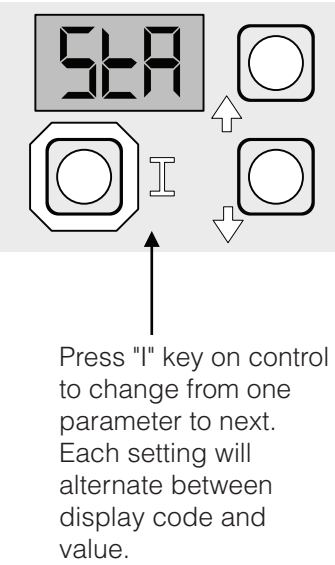

Press "I" key on control to change from one parameter to next. Each setting will alternate between display code and value.

Operating Mode Parameters

StA	Status (see Status Numbers)
bt	Boiler Temperature
SP	Operating Setpoint
HL	High Limit Setpoint
HdF	High Limit Differential Setpoint
tt	Heat Request Status
dh	DHW Heat Request Status
FLA	Flame Current
run	Run Time Hours
CYC	Boiler Cycles
Err	Error

Status (StA) Codes

1	Standby
4	Prepurge
6	Spark
7	Flame Proving
8	Running
10	Retry/Recycle Delay
13	Soft Lockout
14	Hard Lockout
15	Waiting for Limit to Close
16	Flame Present Out of Sequence
17	Self Test
18	Waiting for Damper to Open
19	Waiting for Damper to Close
20	Damper Failure to Open
21	Damper Failure to Close

Figure 10-4: Boiler Display

10 Operation *(continued)*

F. More Information About Adjustable Parameters

1. High Limit (HL_)
   Burner turns "off" when boiler water temperature (bt) is above this value. Operating setpoint (SP) equals high limit setpoint.
2. Differential (dF_)
   Differential is number of degrees boiler temperature must decrease below the operating setpoint before boiler can restart.
3. Circulator Overrun Time (Or_)
   Circulator overrun time (also called “circulator off delay” or “circulator post purge”) continues circulator operation after a call for heat has ended, sending excess heat from boiler into system.

NOTICE: Ensure system piping and zone panel settings allow water flow to priority zone after call for heat ends.

4. Circulator Pre-purge Time (PP_) See Table 10-5.
   When boiler is warm (boiler water temperature higher than 140°F (adjustable using start temperature parameter) and there is a thermostat call for heat, system circulator is started and boiler firing is delayed Circulator Pre-purge minutes. If temperature drops below 140°F or there is a DHW call for heat, boiler is started without delay. Additionally, boiler is started without delay if thermostat call for heat is initiated when boiler water temperature is less than 140°F. This feature helps save energy by satisfying home heating needs with residual boiler heat rather than cycling boiler.

Table 10-5: Circulator Pre-purge Time example, (PP_ = 2 minutes)

Call for Heat Source	DHW Terminal Selection	Boiler Temperature	Burner Status
TT = on	-	<140	Start with no delay
TT = on	-	>140	Start after 2 minute delay
DHW = on	tt2	<140	Start with no delay
DHW = on	tt2	>140	Start after 2 minute delay
DHW = on	dh	<140	Start with no delay
DHW = on	dh	>140	Start with no delay

5. Start Temperature (St_)
   Amount of “heat available” is calculated by taking difference between measured boiler water temperature and Start Temperature setting. Useful “heat available” is dependent on type of heating emitter installed in home. Heat emitters require a certain minimum temperature to operate effectively. Default settings reflect cast iron radiators. Fan coils may require a start temperature setting of 180°F or 160°F before providing heat to home.
6. Priority Time (Pt_)
   When Priority Time parameter is set to “on” and Domestic Hot Water (DHW) call for heat is “on”, the DHW demand will take “Priority” over home heating demand. During Priority Time, system circulator will be forced “off”. Priority Time ends and system circulator is released to service home heating demand when Domestic Hot Water call for heat is over. When Priority Time parameter is set to “Off”, DHW call for heat does not force “off” system circulator.

10 Operation *(continued)*

7. Domestic Hot Water (DHW) Terminal Function (dh_)

   DHW Circulator output can be connected to a domestic hot water circulator or a second heating zone circulator. These applications are selected as follows:

   a. Indirect Water Heater (IWH) (dh_is set to Domestic Hot Water Demand (dh))

      IWH limit is wired to "DHW" terminal on control. DHW circulator is wired to "DHW Circulator" on control wire harness.

      Table 6 shows circulator status with different combinations of "TT Input", "DHW Input", and "Priority Time"

      Pre-purge time delay control logic is bypassed to allow boiler to fire without delay.

      When DHW demands ends, DHW circulator is de-energized, System Circulator "force off" is removed (system circulator can respond normally).

      When Priority Time parameter is set to "off" System Circulator is not forced off for a DHW call for heat.

Table 10-6: DHW Terminal Function (dh_) Selection = Domestic Hot Water Demand, (Parameter dh_ = dh)

Call for Heat			Circulator Status	
T-T Input	DHW Input	Priority Time (Pt_)	System Circulator Output	DHW Circulator Output
on	off	On	on	off
on	on	On	off	on
off	on	On	off	on
on	off	off	on	off
on	on	off	on	on
off	on	off	off	on

   b. Second heating zone (dh_ is set to second heating zone (tt2))

      Helpful when home uses only two heating zones (eliminates need for two circulator zone panel)

      Zone 1 is wired to "Thermostat" connection on control wire harness

      Zone 2 is wired to "DHW" terminals on control.

      Zone 1 circulator is wired to "System Circulator" on control wire harness.

      Zone 2 circulator is wired to "DHW Circulator" on control wire harness.

      Two circulator outputs are used to control two independent heating zones and energize during corresponding call for heat. See Table 10-7.

Table 10-7: DHW Terminal Function (dh_) Selection = Second Heating Zone, (Parameter dh_ = tt2)

Call for Heat		Circulator Status	
T-T Input	DHW Input	System Circulator Output (Zone 1)	DHW Circulator Output (Zone 2)
off	off	off	off
on	off	on	off
on	on	on	on
off	on	off	on

11 Before Leaving Jobsite

Before Leaving Jobsite:

- ☐ Boiler and system filled with water
- ☐ Performed gas leak test
- ☐ Checked pilot burner flame
- ☐ Checked main burner flames
- ☐ Checked gas input rate
- ☐ Checked gas inlet pressure
- ☐ Checked gas manifold pressure
- ☐ Checked CO level in vent
- ☐ Checked vent damper operation
- ☐ Check ignition system safety shut-off device
- ☐ Tested LWCO functionality
- ☐ Tested high limit operation
- ☐ Tested additional field-installed controls for functionality outlined by manufacturer. (i.e. additional LWCO, additional high limit, or other controls if used)
- ☐ Button on blocked vent switch pushed in
- ☐ Reviewed User's Information Manual and system operation with owner or operator

12 Service and Maintenance

Important Product Safety Information: Refractory Ceramic Fiber Product

WARNING

Some boiler components use materials that contain refractory ceramic fibers (RCF). RCF has been classified as a possible human carcinogen. When exposed to elevated temperatures, RCF may change into crystalline silica, a known carcinogen. When disturbed as a result of servicing or repair, these substances become airborne and, if inhaled, may be hazardous to your health. Avoid breathing RCF particulates and dust.

Precautionary Measures:

- Do not handle RCF parts or attempt any service or repair work involving RCF without wearing the following protective gear:
    1. A properly fitting National Institute for Occupational Safety and Health (NIOSH)-certified air-purifying respirator with a filter efficiency of at least 95%. Respirator should also include a full facepiece when handling used RCF. Other types of respirators may be required depending on site conditions. Current NIOSH recommendations may be found on the NIOSH website http://www.cdc.gov/niosh/homepage.html. NIOSH-approved manufacturers, respirators and associated user instructions are listed on the NIOSH website.
    2. Long sleeved, loose fitting clothing that is sufficiently tight around potential entry points for RCF dust.
    3. Gloves.
    4. Eye protection, such as goggles, safety glasses with side shields, or full facepiece.
- Take steps to assure adequate ventilation.
- Handle RCF carefully to minimize airborne dust. Use hand tools whenever possible.
- Dampen used RCF with light water spray prior to removal to prevent airborne dust.
- Do not use compressed air or dry sweeping for clean-up. Frequently clean work area with a vacuum or by wet sweeping to minimize debris accumulation.
- Vacuum work clothes before leaving work area. Wash work clothes separately from other laundry and rinse washing machine after use to avoid contaminating other clothes.
- Wash all exposed body areas gently with soap and water after contact.
- Discard used RCF components by sealing in an airtight plastic bag or container. Refer to local, regional, state or provincial regulations to identify applicable disposal requirements.

First Aid Procedures:

- Eye contact: Flush with water for at least 15 minutes. Do not rub eyes. Seek immediate medical attention if irritation persists.
- Skin contact: Wash affected area gently with soap and water. Do not rub or scratch affected skin. Seek immediate medical attention if irritation persists.
- Nose and throat contact: If these become irritated, leave the area and move to a location with clean fresh air. Drink water and blow nose. Seek immediate medical attention if symptoms persist.

12 Service and Maintenance *(continued)*

⚠ WARNING

Service on this boiler should be undertaken only by trained and skilled personnel from a qualified service agency. Inspections should be performed at intervals specified in this manual. Maintain manual in a legible condition.

- Keep boiler area clear and free of combustible materials, gasoline and other flammable vapors and liquids.
- Do not place any obstructions in boiler room that will hinder flow of combustion and ventilation air.

⚠ DANGER

Explosion Hazard. Electrical Shock Hazard. Burn Hazard. This boiler uses flammable gas, high voltage electricity moving parts, and very hot water under high pressure. Assure that all gas and electric power supplies are turned off and that water temperature is cool before attempting any disassembly for service.

⚠ CAUTION

Label all wires prior to disconnection when servicing controls. Wiring errors can cause improper and dangerous operation. Verify proper operation after servicing.

Annual Inspection

- ☐ Vent system
- ☐ Boiler flue passages
- ☐ Burners
- ☐ Bater piping
- ☐ Temperature/pressure gauge
- ☐ Relief valve operation
- ☐ Gas piping
- ☐ Air openings
- ☐ Pilot flame
- ☐ Main burner flame
- ☐ Gas inlet pressure
- ☐ Gas outlet pressure

Annual Test

- ☐ Gas input rate to boiler
- ☐ Measure CO in vent
- ☐ Vent damper operation
- ☐ LWCO
- ☐ High limit control
- ☐ Thermostat operation
- ☐ CO detector operation

A. General. Inspection and service should be conducted annually. Turn off electrical power and gas supply while conducting service of maintenance. Follow instructions TO TURN OFF GAS TO APPLIANCE. See Figure 9-2.

B. Inspect Vent System.
   1. Remove obstructions in vent pipe and chimney.
   2. If masonry chimney is lined, verify lining is in good condition and there are no openings into chimney.
   3. Remove soot accumulations with wire brush and vacuum.
   4. Repair or replace deteriorated vent pipe and vent accessories.
   5. Inspect piping to determine that it is adequately supported. Repair sags.
   6. Repair leaking joints.

C. Inspect boiler flue passages for blockage or soot accumulation.
   1. Remove vent pipe and vent damper.
   2. Remove sheet metal screws securing Jacket Top Panel. Remove Top Panel.
   3. Remove screws securing Canopy to Section Assembly. Remove Canopy.
   4. Using flashlight, examine all flue passageways.
      a. If passageways are free of soot and obstruction, replace canopy, secure and seal.
      b. If passageways need cleaning, remove burners as described in Paragraph D. Using long handle wire or bristle flue brush and vacuum, brush flueways thoroughly from top of boiler.
   5. Install new gasket material (See Section 15: Service Parts). Install canopy.
   6. Install Jacket Top Panel, Vent Damper, and vent pipe.

12 Service and Maintenance *(continued)*

D. Clean Main Burners and Firebox.
   1. To remove burners for cleaning, changing orifices, or repairs:
      a. Remove Jacket Front Panel.
      b. Disconnect pilot tubing at gas valve.
      c. Disconnect 3-wire plug at the gas valve.
      d. Remove wires to flame roll-out switch.
      e. Disconnect ignitor sensor cable at boiler control.
      f. Remove burner access panel.
      g. Mark location of pilot main burner on the manifold if marking on manifold is missing.
      h. Hold burner at throat. Lift front of burner to clear orifice. Pilot burner can only be removed by lifting the burner adjacent to its right first.
   2. Brush top of burners with a soft bristle brush. Vacuum burners.
   3. Check orifices. Drilled passageways must be free of lint or dirt.
   4. Vacuum tip of Pilot Burner.
   5. Clean firebox by vacuuming. Exercise care not to damage base insulation.
   6. Install burners by reversing procedure used to remove burners. Make sure burner with pilot assembly is in same location as original installation.

⚠ WARNING

Be careful handling pilot tubing. Do not crimp or crack gas pilot tube. Leaking pilot tubing could result in serious injury, or substantial property damage.

   Check burners to see that they are located properly in slot at rear of burner tray. Reinstall burner access panel. Reconnect flame roll-out switch wires, pilot gas supply, or pilot lead.
   7. Connect pilot gas supply, igniter/sensor wire, and ground wire at Boiler Control.
   8. Install Burner Access Panel. Connect Flame Rollout Switch wires.

E. Inspect Water Piping
   1. Check all system piping for leaks.
   2. Repair any leaks before placing back into service.

F. Inspect Temperature/Pressure Gauge
   1. Water temperature needle should move with variation in water temperature.
   2. Pressure needle should move with variation in pressure.
   3. Replace gauge if needed.

G. Operate Safety Relief Valve
   1. When manually operating relief valve, water will discharge. Take precautions to avoid contact with hot water and avoid water damage. Inspect relief valve and lift lever to verify flow.
   2. If relief valve leaks or will not seat properly, replace relief valve.

H. Inspect Gas Piping
   1. Sniff around boiler area for indication of gas leak.
   2. Locate leaks using approved gas detector, a non corrosive leak detector fluid or other approved leak detection methods.
   3. Repair any leaks before placing back into service and retest.

I. Inspect Air Openings
   1. Keep boiler area clear of combustible materials.
   2. Remove any obstructions in boiler room that will hinder flow of combustion and ventilation air and dilution air.

J. Follow "Operating Instructions" outlined in Figure 9-2.

K. Inspect Pilot Flame
   See "Start-up and Checkout - Check Pilot Burner Flame"

L. Inspect Main Burner Flames
   See "Start-up and Checkout - Check Main Burner Flame"

M. Check gas inlet pressure
   See "Start-up and Checkout - Check gas inlet pressure"

N. Check gas outlet pressure
   See "Start-up and Checkout - Check gas outlet pressure"

O. Check Gas Input Rate to Boiler
   See "Start-up and Checkout - Check Gas Input to Boiler"

P. Measure CO in vent. See "Start-up and Checkout - Measure Carbon Monoxide Level".

12 Service and Maintenance *(continued)*

Q. Test Vent Damper Operation
   Vent damper must be in open position when main burners are operating.

R. Test Functionality of LWCO
   See "Start-up and Checkout - Check LWCO Functionality.

S. Check High Limit Control
   See " Start-up and Checkout - Check High Limit Control".

T. Check Thermostat Operation
   See "Start-up and Checkout - Check Thermostat Operation"

U. Check CO detector operation (if available).

V. Lubrication. There are no parts requiring lubrication by service technician or owner. Circulator bearings are water lubricated.

W. If remodeling has occurred, verify combustion air supply is adequate.

13 How It Works

1	Control	X-2 boilers are equipped with an Intelligent Hydronic Control. This control combines features such as ignition control, high limit switch, and circulator relays. Energy is saved by using a thermal purge feature that starts the circulator and delays burner start when residual heat is available in boiler.
		When thermostat calls for heat, control module starts system circulator, checks safety limits, and activates vent damper.
		Control has 2 demand inputs and 2 circulator output connections. These can be configured for single zone & indirect water heater or 2 zone system.
		When vent damper is opened completely, control module opens pilot valve and activates ignition spark.
		Control module will sense pilot flame. Once pilot flame is established, control module opens gas valve and main burners will ignite.
		When thermostat is satisfied, control module turns off gas valve, deactivates damper, and deactivates circulator.
		Control module indicates boiler status and returns error codes if applicable. See “Troubleshooting” for guidance with error codes.
2	Transformer	Control transformer reduces line voltage to 24 volts for gas valve and safety limit circuit.
3	Draft Hood	Provides adequate dilution air and ensures proper draft for boiler operation.
	Blocked Vent Switch	If vent becomes blocked, switch will open (requiring manual reset) and cause burners to shut down.
4	Flame Roll-Out Switch	If flames roll out of burner tubes, switch will open (requiring replacement) and cause burners to shut down. If switch trips, determine cause of flame roll-out.
5	Gas Valve	Regulates gas flow to boiler.
6	Pilot	Provides ignition source for burner lighting.
7	Vent Damper	Closes during off cycles to reduce heat loss from house to vent.
8	IDL 1200 Temperature Sensor/ Low Water Cut Off (LWCO)	Dual sensor for boiler temperature control and protection against potentially damaging low water conditions in boiler. In event of low water condition, “LOW WATER” LED will turn on and control will shutdown burner. Auto reset function allows boiler to fire when water level is returned to normal.

13 How It Works *(continued)*

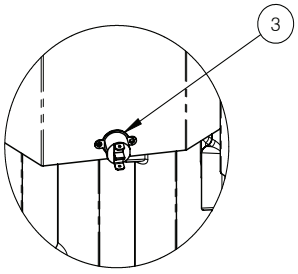

Rear of Boiler

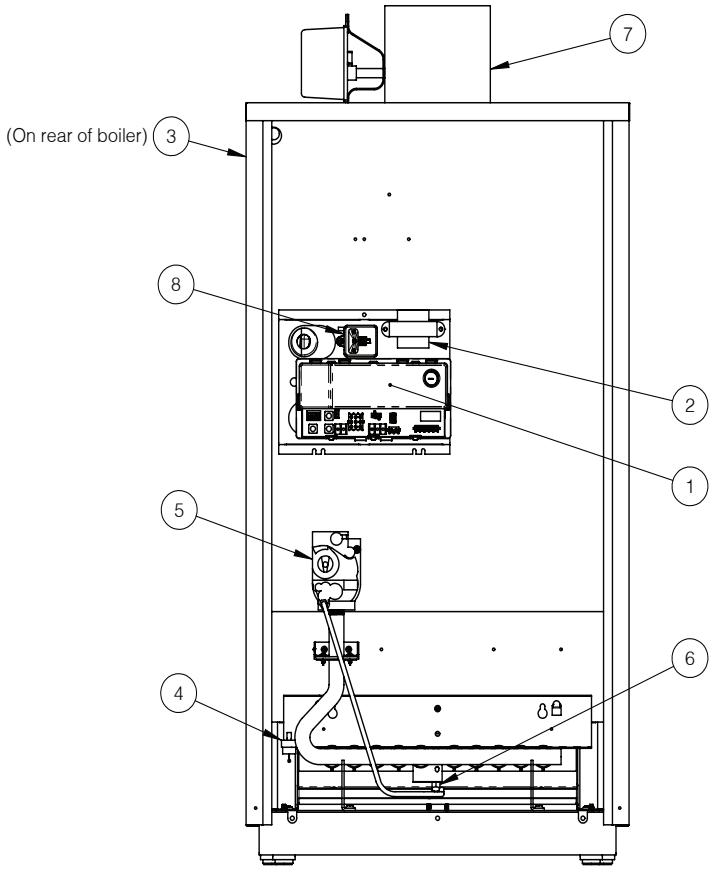

14 Troubleshooting

A. Before Troubleshooting

When using troubleshooting tables, keep in mind:

1. Troubleshooting should be completed by a professional heating technician.
2. Before seeking technical assistance, the servicing technician should have a electrical meter and gas pressure gauge available for use.
3. Check electrical connections on boiler before proceeding (see Figure 8-1 and Figure 8-2).
   a. Ensure 120VAC power polarity is correct, and boiler is properly grounded.
   b. Ensure control power supply 24VAC (minimum 18VAC - maximum 30VAC) polarity is correct.
4. Controls are tested during manufacturing process. Defective control is least likely cause of failure.
5. When checking voltage across wiring harness, be careful not to insert meter probes into pins. Doing so may damage pin, resulting in loose connection when harness is reconnected.

B. IDL 1200 LWCO: Amber "LOW WATER" LED indicates the boiler is not sensing water in boiler.

1. If AMBER LED is ON and boiler is filled with water: remove sensor from well.
   a. Make sure metal clip is protruding enough to come in contact with inside of well tube.
   b. Check to ensure well does not have any heat transfer grease or other contaminants that may interfere with metal sensor near contacting well.
   c. If this does not resolve problem, drain boiler, remove well and examine for excessive residue build up. Clean as needed and re-install.
2. If the AMBER LED is BLINKING, IDL 1200 is nearing limit of its water detection range. This is a result of either:
   a. Poor connection between metal sensor head and inside of copper well.
   b. Excessive residue build up on exterior of well . Follow steps under B1 to address this issue.

⚠ WARNING

A low water condition is a serious and potentially dangerous condition. In the event the IDL 1200 detects a low water condition, the system must be inspected by a qualified service technician before the boiler is returned to service. Do not attempt to add water to a hot boiler. Allow the boiler to fully cool before adding water.

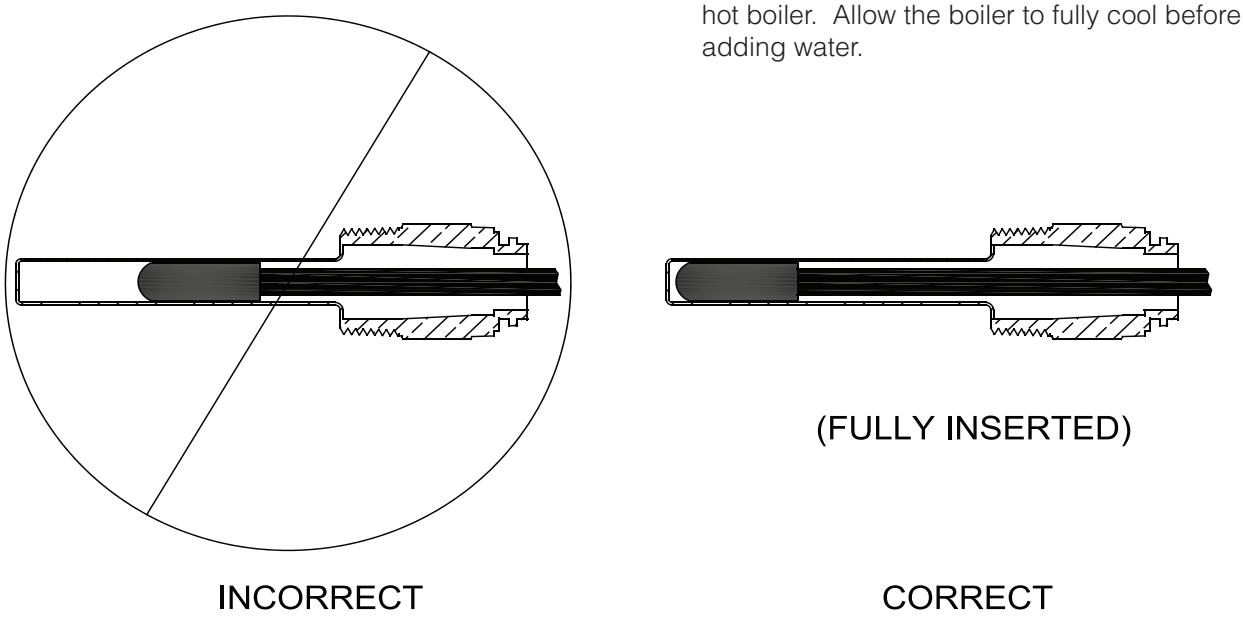

Figure 14-1: Limit Sensor Position

14 Troubleshooting *(continued)*

C. Use Control Display Err (ERROR) Number To Direct TroubleShooting Efforts

If control detects an error it will flash "Err" (ERROR) followed by a number. Use this number to identify boiler problem and corrective action in table below. If there is no Err display, proceed to Troubleshooting Section D:

Display	Status	Recommended Corrective Action
Blank	Boiler or Control is not powered	No 120 Vac Power at boiler, check breaker and wiring between breaker panel and boiler
Err 4	Flame Current Lower than Threshold	Check pilot assembly. Refer to Troubleshooting Section, D6.
Err 6	Flame Sensed Out of Normal Sequence	Flame sensed out of normal sequence (before opening gas valve or after closing gas valve). Check gas valve for proper operation.
Err 18	Electronics Failure	Cycle power to control. Replace control if problem persists.
Err 23	Flame Sensed During Pre-purge	Flame sensed during pre-purge (before gas valve signaled open). Check the gas valve for proper operation. Replace gas valve if problem persists.
Err 32	Temperature Sensor Failure	Temperature sensor or interface failure (open or short connection, increased connection resistance, dual sensor mismatch) or control hardware failure. - Check sensor is securely attached to control P7 connector. - Check sensor wire is not damaged. - If secure and in good condition, replace sensor. - If problem persists, replace control.
Err 55	Damper Failed to Open	Atmospheric Damper End Switch failed to close (end switch contacts stuck open). Refer to Troubleshooting Section, D5.
Err 56	Damper Failed to Close	Damper open. Voltage should not be present on P6-5. Control, vent damper or wire harness is defective. While the Err 56 is displayed by the control, perform the following tasks: • Remove call for heat (adjust thermostat or remove wire from thermostat connection. • Check for 24Vac between P6-5 and ground. • If voltage not present, attempt to start boiler again. • If 24Vac is present, unplug vent damper harness from control. • With wire harness unplugged, check for 24Vac between P6-5 (on Control) and ground. • If voltage present, replace control. • If voltage not present, failed vent damper or wiring harness. • Check wiring harness for shorts or mis-wiring. Replace if defective. • If harness not defective, replace vent damper.
Err 57	Flame Rod Shorted to Burner Ground	Flame Rod shorted to burner ground, this can result from excessive flue gas condensation. - Check for excessive condensate. Dry pilot. Adjust setpoint higher. - Check for loose or damaged ignition wire.
Err 58	AC Line Frequency	Error AC Signal is too noisy or frequency is incorrect. Check supply voltage. Check Sensor for Common shorted to ground.
Err 59	Line Voltage Error	AC voltage out of specification high or low. Check supply voltage.
Err 60	Thermostat Input Higher than Threshold	Check thermostat wiring.
Err 61	Line Voltage Unstable	Possibly too many heavy loads switching on and off cause erratic supply voltage. Check supply voltage.
Err 63	Soft Lockout – Maximum Recycles Exceeded	Maximum number of recycles exceeded. Refer to Troubleshooting Section, D6.
Err 64	Soft Lockout – Internal Failure	Electronics has detected an error. This can be caused by an actual controller internal fault or wiring fault: - Check vent damper, cycle power with vent damper disconnected. If error is cleared, reconnect vent damper and refer to Recommended Corrective Action listed under StA 20, damper failed to open. - Check pilot assembly, - If problem persists, replace control.

14 Troubleshooting *(continued)*

D. Use STA (STATUS) Number To Guide Troubleshooting

The control will flash "STA" followed by a number. Use this number to identify the boiler problem in table below:

1. Boiler and Circulator Off

Display / Status	Recommended Corrective Action
STA 1 Standby Burner off Circulator off	Boiler has not detected a call for heat (tt = oFF and dh = oFF). Check that thermostat: - When a thermostat call for heat is detected, control display "tt" will show "on" - Make sure thermostat is calling for heat and contacts (including appropriate zone controls) are closed. - Check for loose connection. Check DHW demand: - When a domestic call for heat is detected "dh" will show "on" - Make sure the DHW aquastat contact is closed. Check for loose connection.

2. Circulator is On, But Boiler is Off

Display / Status	Recommended Corrective Action
STA 1 Circulator Pre-purge Burner off Circulator on	Boiler is warm and circulator is providing residual boiler heat to building: Check boiler temperature - Boiler will not start until boiler water temperature is less than Setpoint (SP) minus differential (dF) - If boiler water temperature is higher than Start Temperature (St_, default = 140 F°) and Circulator Pre-purge (PP_, default = 2 minutes) time has not expired, boiler start will be delayed until water temperature drops or time expires. To permit boiler to start sooner, increase Start Temperature parameter. Refer to Operation Section for additional information.

3. Boiler is On, But Circulator is Off

Display / Status	Recommended Corrective Action
STA 8 Burner on Circulator off	Domestic Hot Water (DHW) Priority Forcing Circulator Off - When there is a DHW heat request wired to Control's DHW terminal, System Circulator will be "forced off" for duration of the DHW heat request. When DHW heat request ends, System Circulator "force off" is removed, circulator can respond normally. When Priority Time, (Pt_) Parameter is set to "oFF", System Circulator is not "forced off" for a DHW call for heat. Wiring / Circulator Issue: - Check wiring for loose connection, miswiring - Check circulator

4. Circulator is On But Damper is Not Open

Display / Status	Recommended Corrective Action
STA 15 Limit Open	Waiting for Limit to Open. - Check Blocked Vent Switch, in event of a blocked vent or poor draft condition, the blocked vent switch will open interrupting power to control P5-4. Main burners will be extinguished immediately and circulator will remain on until the thermostat is turned off. Source of blockage must be corrected by trained and skilled personnel from a qualified service agency before resetting switch. Blocked Vents are caused by a collapsed chimney resulting in full or partial blockage, chimney cross sectional area too small, height insufficient or cold chimney causing sustained poor draft. Always follow recommended clearances, combustion air requirements and venting requirements. - Check Flame Rollout Switch, in event of excessive blockage of boiler section flue passageways is developed. Flame rollout switch will open interrupting power to control P5-4. Main burners will be extinguished immediately and circulator will remain on until thermostat is turned off. If flame rollout switch is activated, do not attempt to place the boiler in operation. Source of blockage must be corrected and identical flame rollout switch replaced by trained and skilled personnel from a qualified service agency. - Check External Limit.

14 Troubleshooting *(continued)*

5. Circulator is On But Damper is Not Open

Display / Status	Recommended Corrective Action
StA 20 Damper Failed to Open	Control is waiting for damper to open. Damper end switch has failed to close (end switch contact is stuck open). Combustion can never take place unless damper blade is in the fully open position. Check following: - During status "StA 18" or "StA 20", control terminal "P6 - 5" (yellow wire) is energized. - Check for loose connection between control and vent damper, check damper harness. - Check for obstruction in path of damper - When damper is open (end switch closed), control terminal "P6 – 2" should receive power from vent damper. - Place jumper between control terminal P6-5 and P6-2. If error 55 does not clear, replace control. - Defective harness or vent damper.

6. Circulator is On, Damper is Open But Boiler Fails to Start

Display / Status	Description
StA 10 Retry / Recycle Delay	Boiler is in "Retry Delay": - Burner failed to light (no flame signal). After a 5 minute delay, Control will attempt to light the burner again. There is no limit to the number of retries. Recycle Delay - Burner loses flame during running mode, ("StA 8"). After a 10 second delay, Control will attempt to light burner again. If burner loses flame during running mode, "StA 8" during the next six recycles, Control will progress to a soft lockout.
StA 13 Soft Lockout	When a soft lockout occurs, boiler will shut down. Boiler automatically restarts once condition that caused the lockout is corrected and one-hour time delay is completed. Boiler can be restarted sooner than time delay by using Adjustment Mode and selecting reset button (see Adjustment Mode instructions) or by cycling power. Soft Lockout is caused by one of following: - Err 63, Maximum Recycles Exceeded – Burner lost flame during running mode, "StA 8" six times in a row. Refer to recommended corrective actions on next page to help determine cause of problem. - Err 64, Internal Failure, refer to Error code listing for recommended corrective action. - Err 23, Flame sensed during pre-purge (before gas valve signaled open). Check gas valve for proper operation. Replace gas valve if problem persists.
StA 14 Hard Lockout	When a hard lockout occurs, boiler shuts down.
StA 16 Flame Out of Sequence	If flame is detected in pre-purge, Control goes to Flame Out of Sequence Before trial, "StA 16" and "Err 23" is reported. Control gives a flame 10 seconds to disappear. If flame goes away, control resumes heating cycle from the beginning. If it doesn't, "Err 23" is cleared and "Err 6" is reported. When flame is off, control goes to Soft Lockout and "Err 6" is cleared. Check gas valve for proper operation.

14 Troubleshooting *(continued)*

6. Circulator is On, Damper is Open But Boiler Fails to Start (continued)

Display / Status	Recommended Corrective Action
	1. No Spark a. Can you hear sparking while StA 6 is displayed? - If there is no spark noise, replace the control. b. If you can hear spark noise check following: - Loose connection in ignition cable or ground wire - Continuity of ignition cable - Break in ignition cable insulation - Loose ground connection - Break in pilot ceramic insulator - Incorrect pilot spark gap
StA 10 Retry / Recycle Delay StA 13 Soft Lockout	**2. No Pilot Flame** a. If pilot does not light, check the following: - All manual gas valves are open - Supply tubing is not plugged, kinked or leaking - Gas line pressures are good - Gas line is purged of air - Pilot orifice is not plugged (pilot gas is flowing) - Condensate quenching pilot **Note**: It may be necessary to recycle "call for heat" more than once to clear pilot supply tubes of air. b. If no gas flow, check following: - 24 volts across PV and MV/PV at gas valve. If voltage ok, replace defective gas valve - Check for break in wiring harness to gas valve - 24 volts across control connector P5–2 and P5–5. If no voltage at control, replace defective control
	3. Spark does Not Stop When Pilot Lights If spark does not stop when pilot lights, check following: - Loose connection in ignition cable or ground wire - Continuity of ignition cable - Clean flame rod - Pilot electrode porcelain cracked - Pilot flame covers flame rod and is steady and blue, if not adjust pilot flame - Low gas pressure at gas valve inlet - Defective control
	4. Main Flame Does Not Light If the main burners do not light, check following: - Check orifice size and/or blockage - 24 volts across control terminals P5-8 and P5-5? If no voltage while in StA 7, defective control. - 24 volts across MV and MV/PV at gas valve? Check for break in wiring harness to gas valve - Defective gas valve

15 Service Parts

All X-2 Series Repair Parts may be obtained through your local U.S. Boiler Company Wholesale distributor. Should you require assistance in locating a U.S. Boiler Company Distributor in your area, or have questions regarding the availability of U.S. Boiler Company products or repair parts, please contact U.S. Boiler Company Customer Service at (717) 481-8400 or Fax (717) 481-8408.

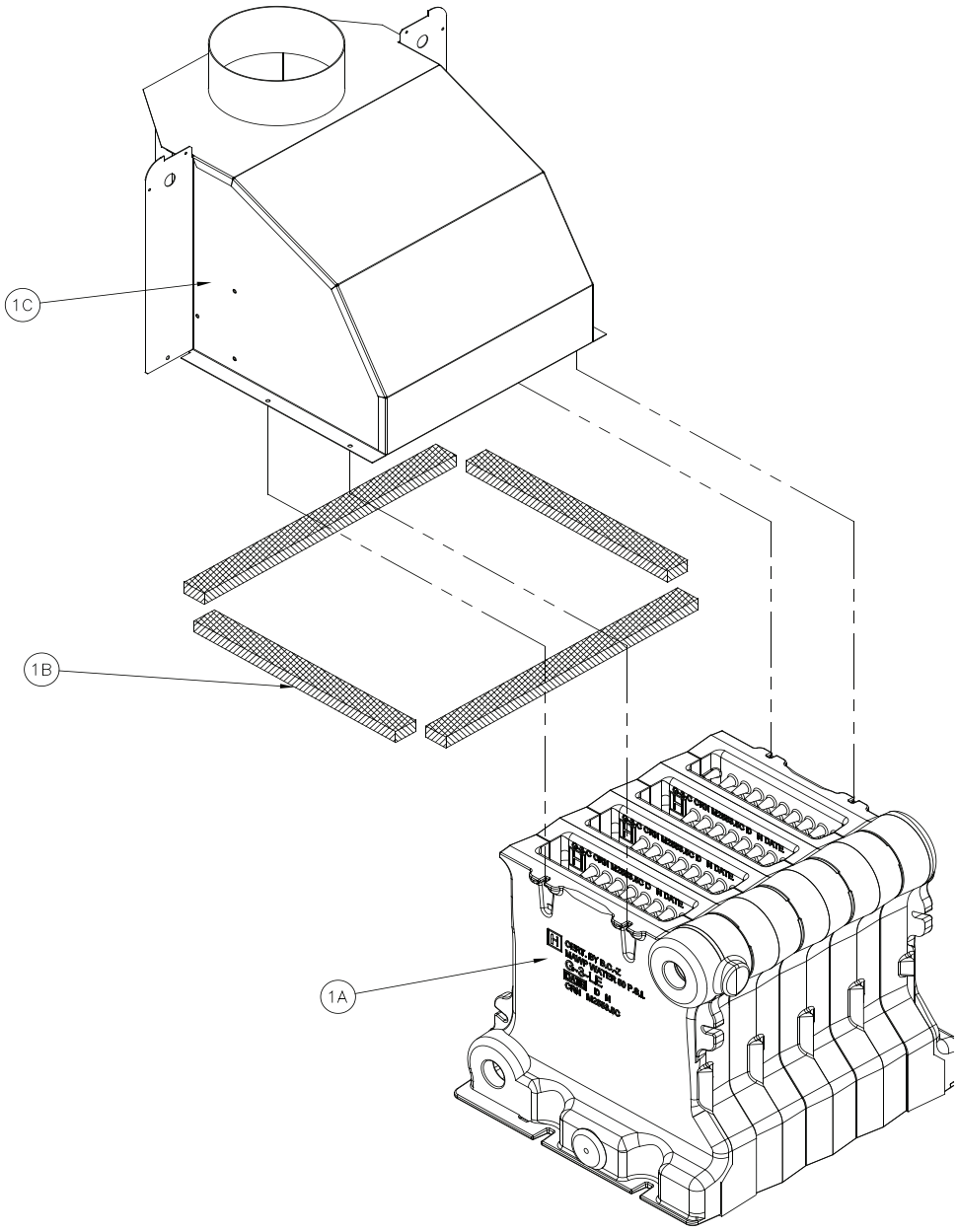

Key No.	Description	Part Number [Quantity]							
		X-202	X-203	X-204	X-205	X-206	X-207	X-208	X-209
1A	Block Assembly	109607-02 [1]	109607-03 [1]	109607-04 [1]	109607-05 [1]	109607-06 [1]	109607-07 [1]	109607-08 [1]	109607-09 [1]
1B	Canopy Gasket Kit	6206001 [1]							
1C	Canopy Assembly	109617-02 [1]	109617-03 [1]	109617-04 [1]	109617-05 [1]	109617-06 [1]	109617-07 [1]	109617-08 [1]	109617-09 [1]
Not Shown	Blocked Vent Switch (see Figure 5-1)	109742-01 [1]							

15 Service Parts *(continued)*

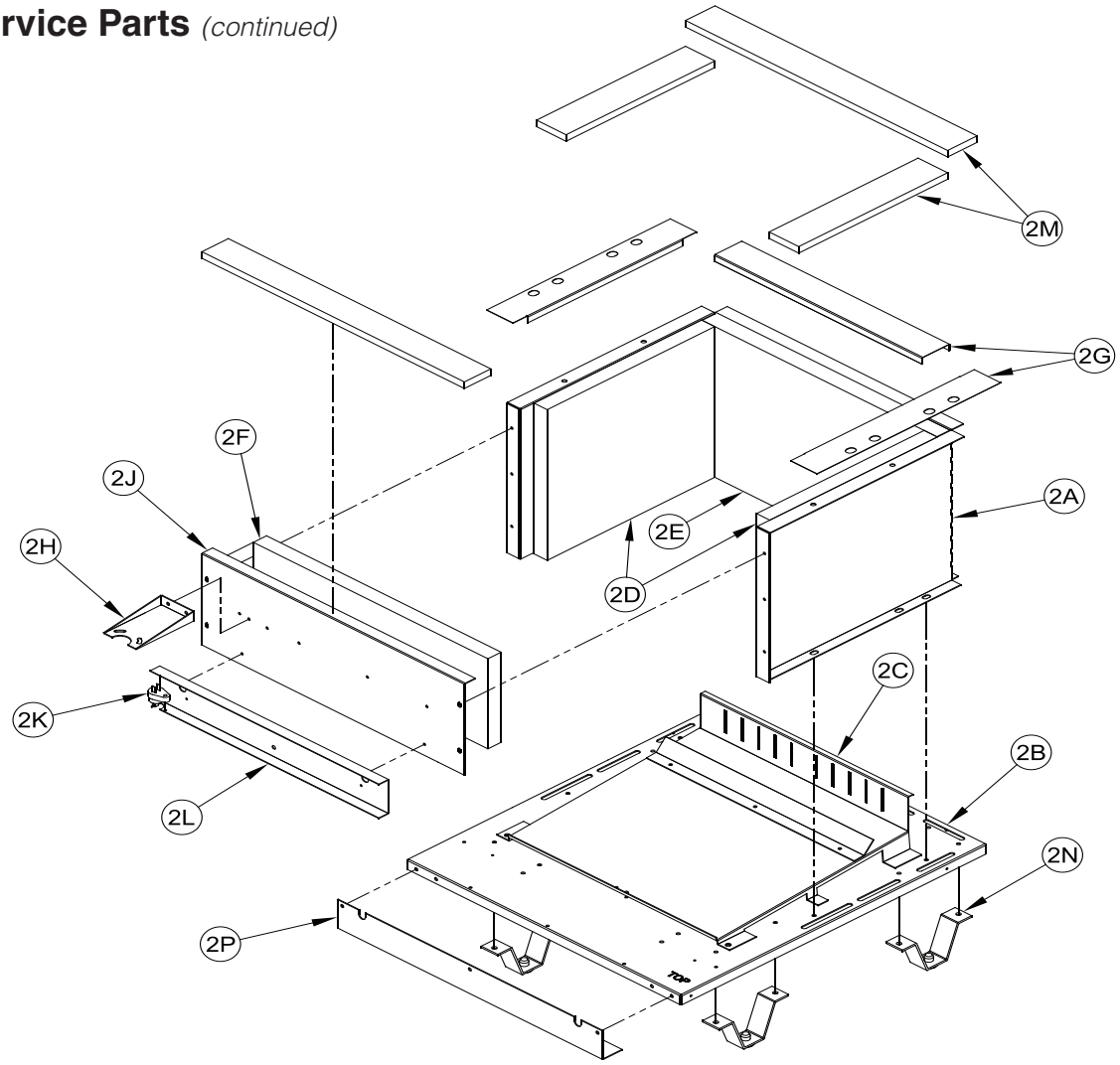

Key No.	Description	Part Number [Quantity]							
		X-202	X-203	X-204	X-205	X-206	X-207	X-208	X-209
2A	Base Wrapper	109613-02 [1]	109613-03 [1]	109613-04 [1]	109613-05 [1]	109613-06 [1]	109613-07 [1]	109613-08 [1]	109613-09 [1]
2B	Base Tray								
2C	Burner Tray								
2D	Base Side Insulation								
2E	Base Rear Insulation								
2F	Base Front Insulation								
2G	Drip Shields								
2H	Manifold Support Bracket								
2J	Base Front Panel								
2K	Flame Rollout Switch								
2L	Burner Access Panel								
2M	Base Gasket Kit								
2N	Base Leg Assembly								
2M	Base Gasket Kit								
2N	Base Leg Assembly								
2P	Front Air Dam								
2K	Flame Rollout Switch	109616-01 [1]							
2M	Base Gasket Kit	6206002 [1]							

15 Service Parts *(continued)*

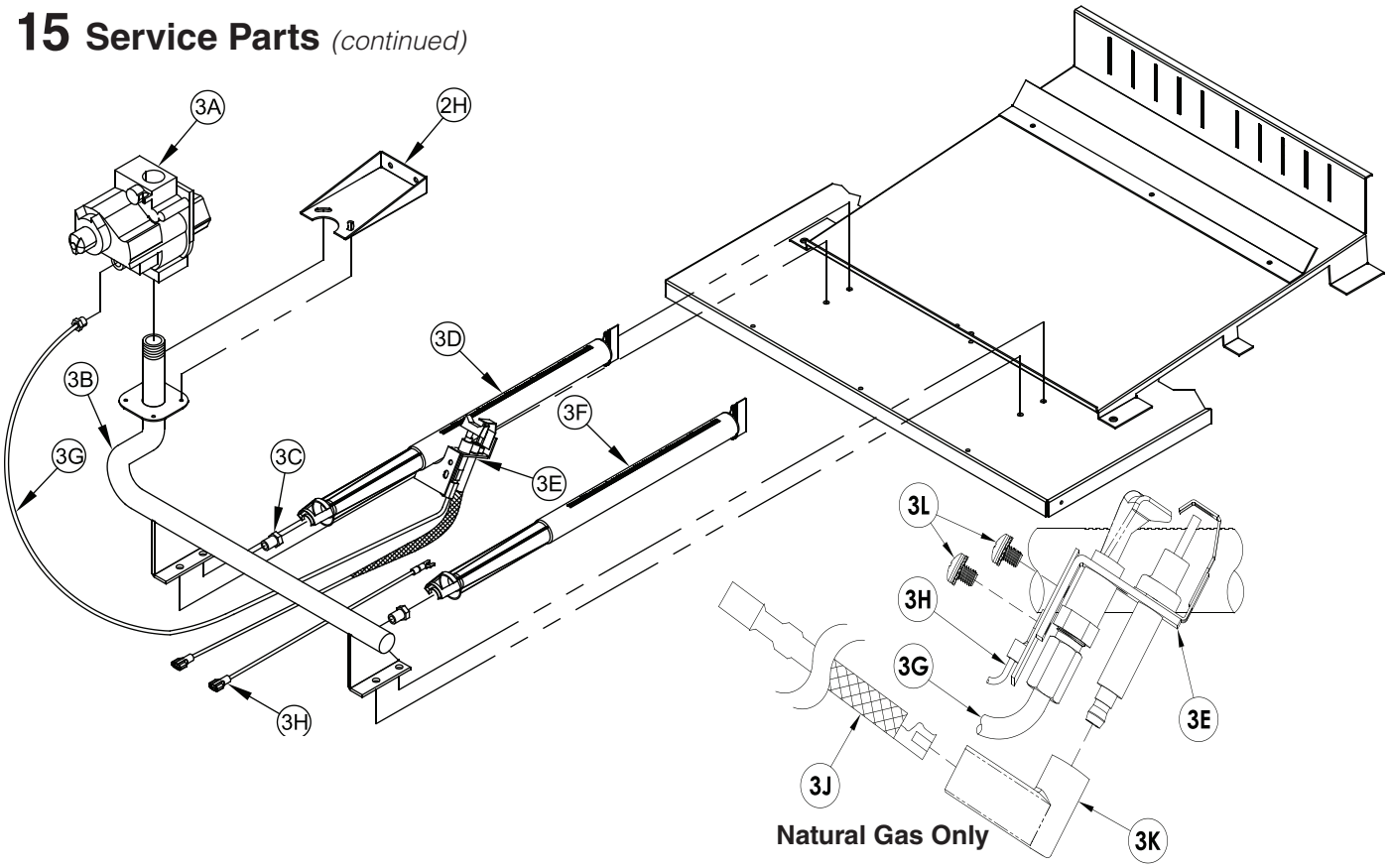

Key No.	Description	Part Number [Quantity]							
		X-202	X-203	X-204	X-205	X-206	X-207	X-208	X-209
3A	Gas Valve (Natural Gas), Honeywell VR8204C3007	109620-01 [1]					N/A		
	Gas Valve (Natural Gas), Honeywell VR8304P4496	N/A					109622-01 [1]		
	Gas Valve (LP Gas), Honeywell VR8204C3015	109615-01 [1]					N/A		
	Gas Valve (LP Gas), Honeywell VR8304P4314	N/A					109621-01 [1]		
3B	½" Gas Manifold	109731-02 [1]	109731-03 [1]	109731-04 [1]	109731-05 [1]	109731-06 [1]	N/A		
	¾" Gas Manifold	N/A					109731-07 [1]	109731-08 [1]	109731-09 [1]
3C	Burner Orifices - Natural Gas #47	109733-01 [1] (16 orifices)							
	Burner Orifices - LP Gas 1.20mm	109734-01 [1] (16 orifices)							
3D	Pilot Burner	109629-01 [1]							
3E	Pilot Assembly - Natural Gas	108112-01 [1]							
	Pilot Assembly - LP Gas	109630-01 [1]							
3F	Main Burner	109628-01 [3 burners per kit]							
3G	1/4" Pilot Tubing	109611-01 [1]							
3H	Ground Wire Assembly	109623-01 [1]							
3J	Ignition Cable/Boot - Natural Gas Only	Available with 3E							
3K	Ignition Cable Boot - Natural Gas Only								
3L	Machine Screw, 10-32 x 1/4" with External Tooth Washer	Source Locally Natural Gas [2], LP Gas [1]							

15 Service Parts *(continued)*

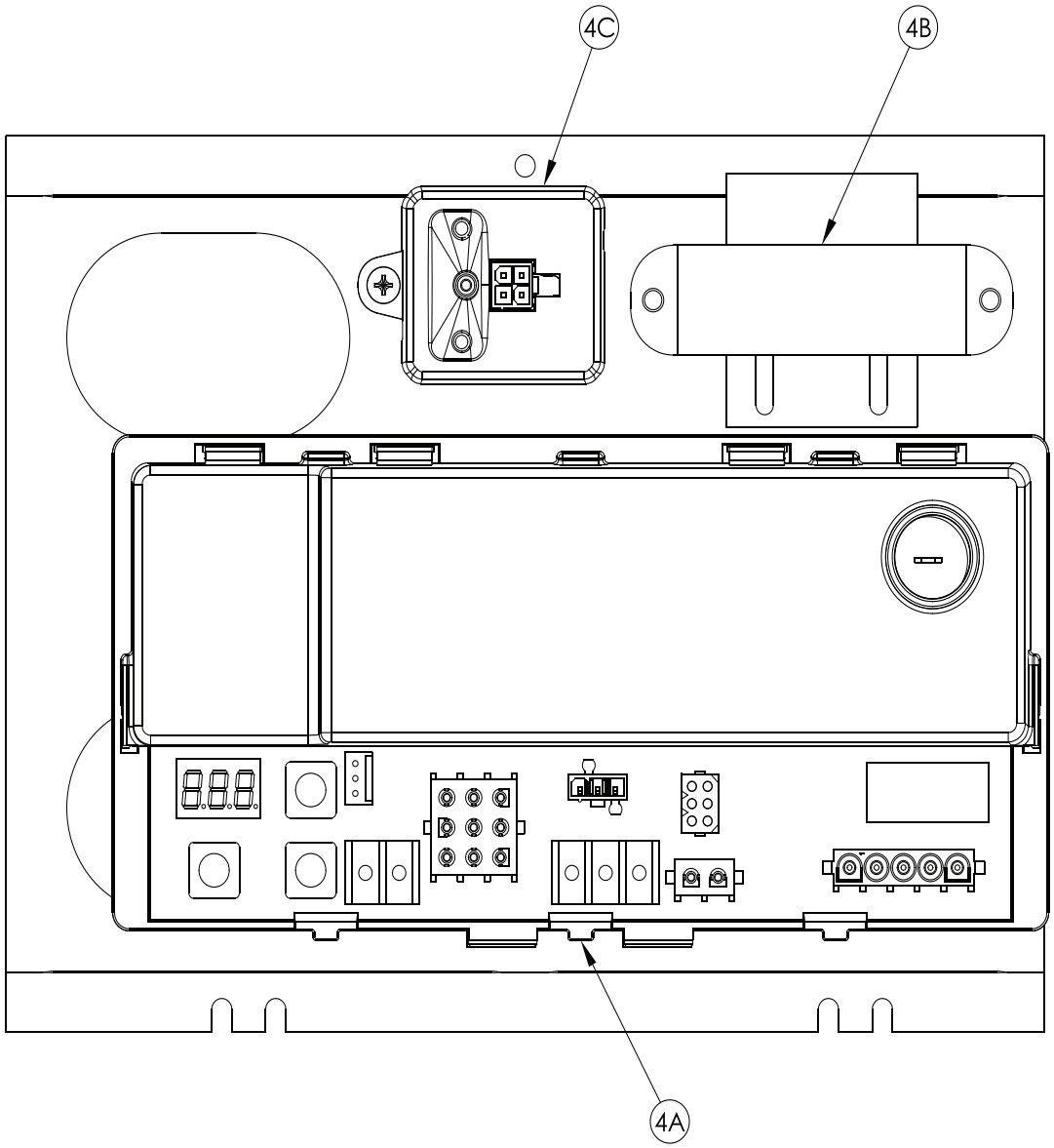

Key No.	Description	Part Number [Quantity]							
		X-202	X-203	X-204	X-205	X-206	X-207	X-208	X-209
4A	Control	103966-02 [1]							
4B	Transformer	106034-01 [1]							
4C	Temperature Sensor/LWCO	106495-02 [1]							
Not Shown	Temperature Sensor (Models without LWCO)	109645-01 [1]							

15 Service Parts *(continued)*

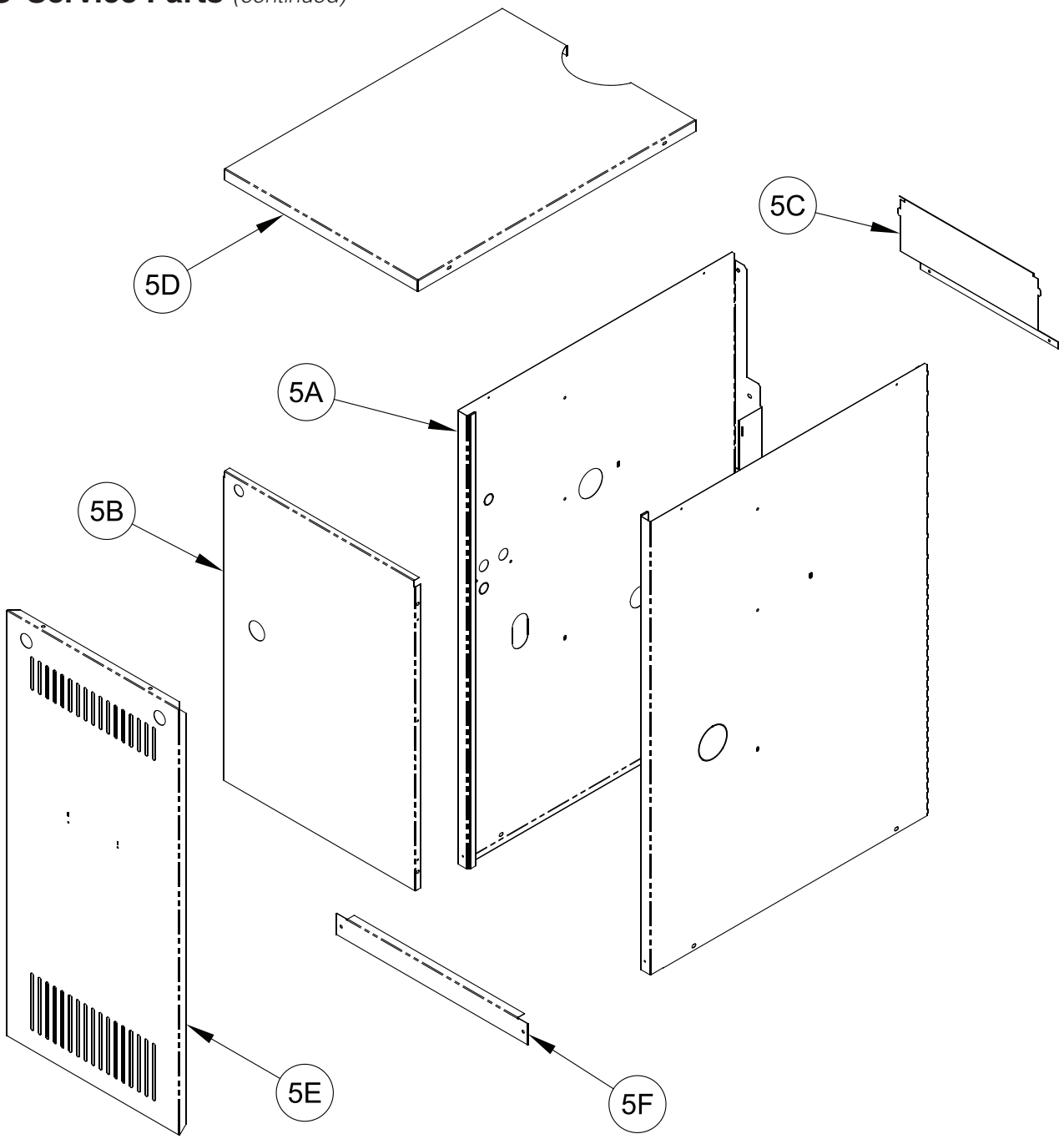

Key No.	Description	Part Number [Quantity]							
		X-202	X-203	X-204	X-205	X-206	X-207	X-208	X-209
5A	Jacket Wrap-around Jacket Panel	106357-03 [1]		106357-04 [1]	106357-05 [1]	106357-06 [1]	106357-07 [1]	106357-08 [1]	106357-09 [1]
5B	Jacket Vestibule Panel	110126-02 [1]	110126-03 [1]	110126-04 [1]	110126-05 [1]	110126-06 [1]	110126-07 [1]	110126-08 [1]	110126-09 [1]
5C	Jacket Rear Discharge Chute								
5D	Jacket Top Panel								
5E	Jacket Front Door								
5F	Jacket Tie Bar								

15 Service Parts *(continued)*

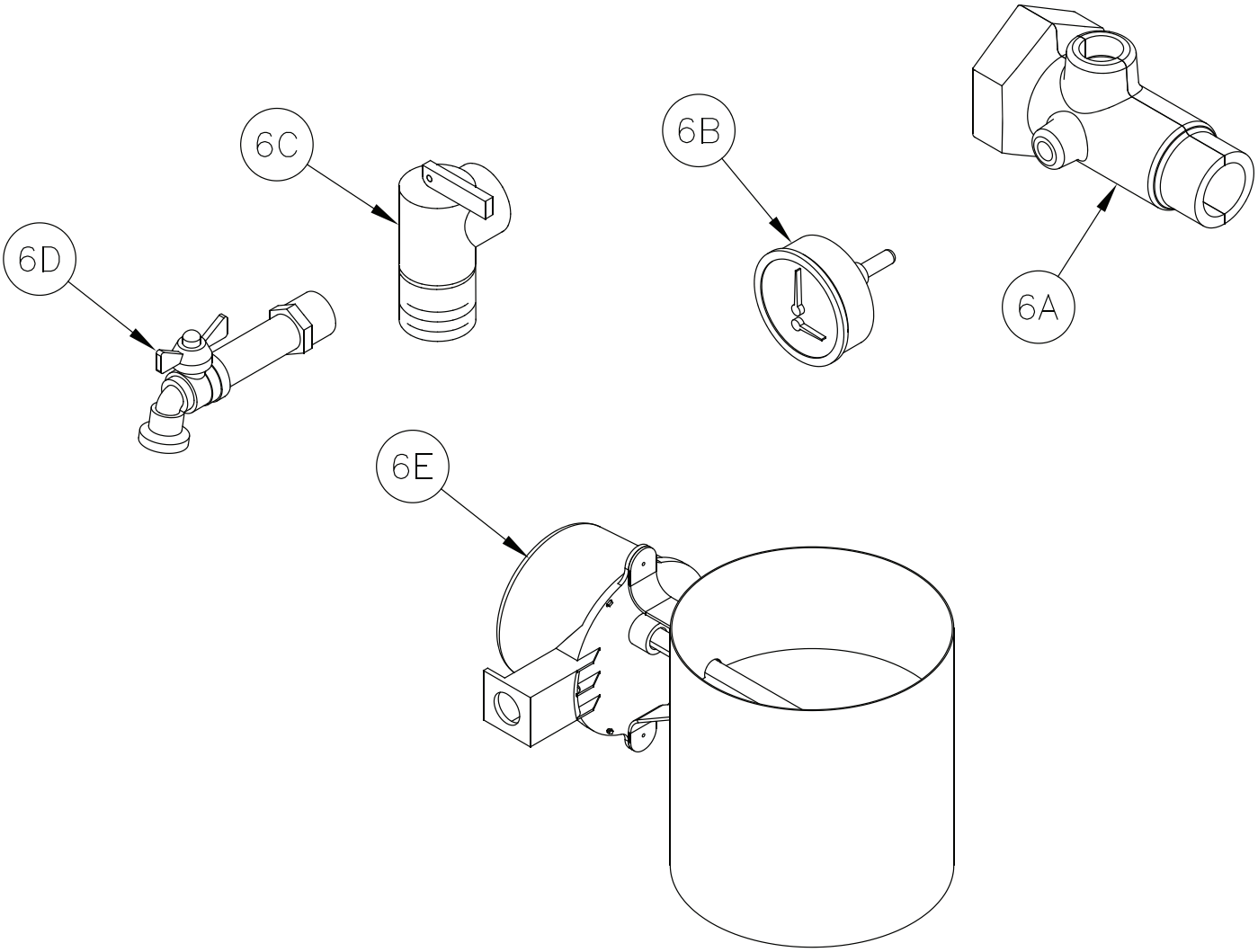

Key No.	Description	Part Number [Quantity]							
		X-202	X-203	X-204	X-205	X-206	X-207	X-208	X-209
6A	Supply Water Manifold	109614-01 [1]							
6B	Temperature/Pressure Gauge	105894-01 [1]							
6C	30 PSI Relief Valve	109038-01 [1]							
6D	Drain Valve	Obtain Locally (3/4" NPT boiler connection)							
6E	Vent Damper	109634-01 [1]		109634-02 [1]	109634-03 [1]		109634-04 [1]		109634-05 [1]
Not Shown	Taco 007	Obtain Locally							
	Grundfos Alpha 15-55	Obtain Locally							

15 Service Parts *(continued)*

7A

7B

Key No.	Description	Part Number [Quantity]							
		X-202	X-203	X-204	X-205	X-206	X-207	X-208	X-209
7A	Power Supply Harness	109639-01 [1]							
7B	Main Control Harness	109640-01 [1]							

Accessories:

Key No.	Description	Part Number [Quantity]							
		X-202	X-203	X-204	X-205	X-206	X-207	X-208	X-209
Not Shown	Boiler Bypass Kit	107795-01 [1]							

Appendix: Combination Refrigeration/ Heating System

A. If boiler is used in connection with refrigeration systems, boiler must be installed with chilled medium piped in parallel with the heating boiler using appropriate valves to prevent chilled medium from entering boiler. See Figure A-1. Also consult Residential Hydronic Heating Installation and Design I=B=R Guide.

B. If boiler is connected to heating coils located in air handling units where they may be exposed to refrigerated air, boiler piping must be equipped with flow control valves or other automatic means to prevent gravity circulation of boiler water during operation of cooling system.

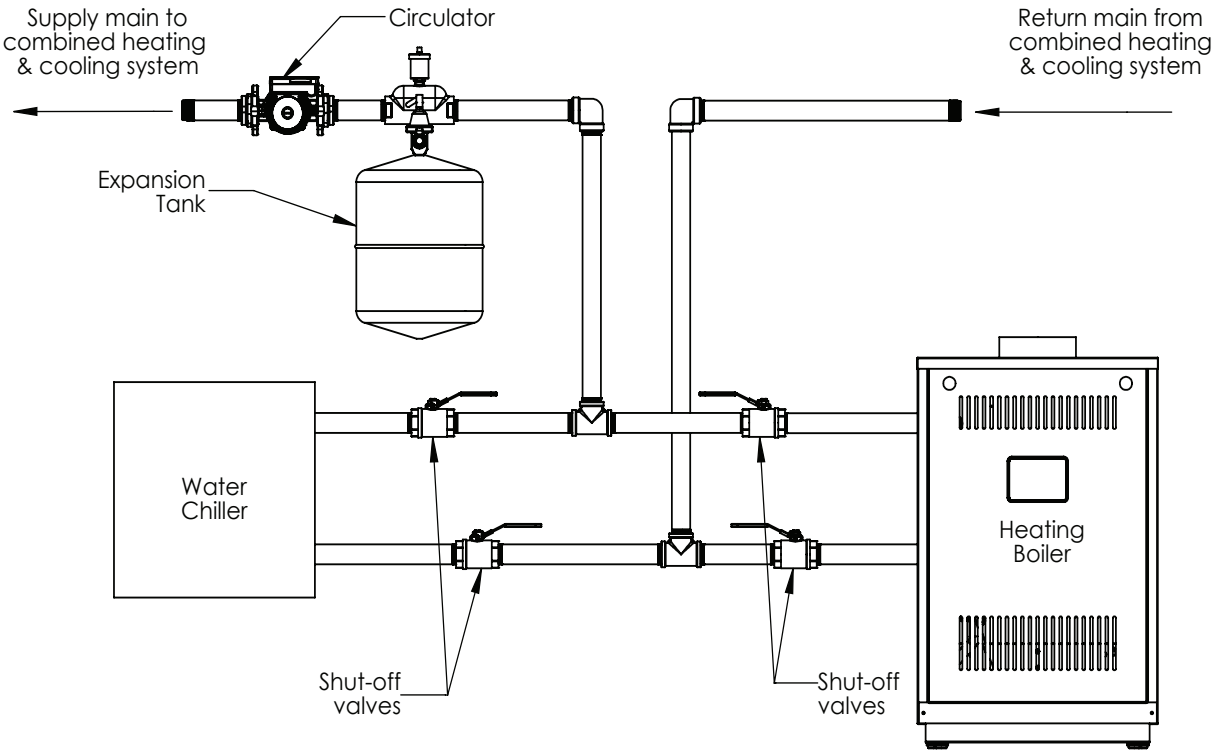

Figure A-1: Isolated Boiler from Refrigeration System

Appendix: Low Return Water Temperatures

Thermal Shock:

Cast iron boilers are very robust. 110°F and below return water temperatures will not cause thermal shock to U.S. Boiler castings.

Condensation is a different matter:

Cast iron boilers will tolerate intermittent periods of condensation, but are not designed for extended condensation periods. Water temperatures below 120°F cause condensation that damage cast iron, burners and other components. This is not unique to U.S. Boiler designs. All cast iron boilers act the same way.

Typical high temperature [170°F and higher] fin tube radiation heating systems will have short condensation cycles in 'shoulder' seasons, early and late parts of the heating season. Short term condensing during these heating season 'shoulders' is unlikely to cause problems.

Larger volume systems during the 'shoulder' heating seasons or systems with aggressive set back or low temperature systems will cause extended condensation periods that will shorten boiler life.

Simple Boiler By-Pass systems are common and they can solve flow problems. These simple by-pass piping arrangements can help reduce condensation.

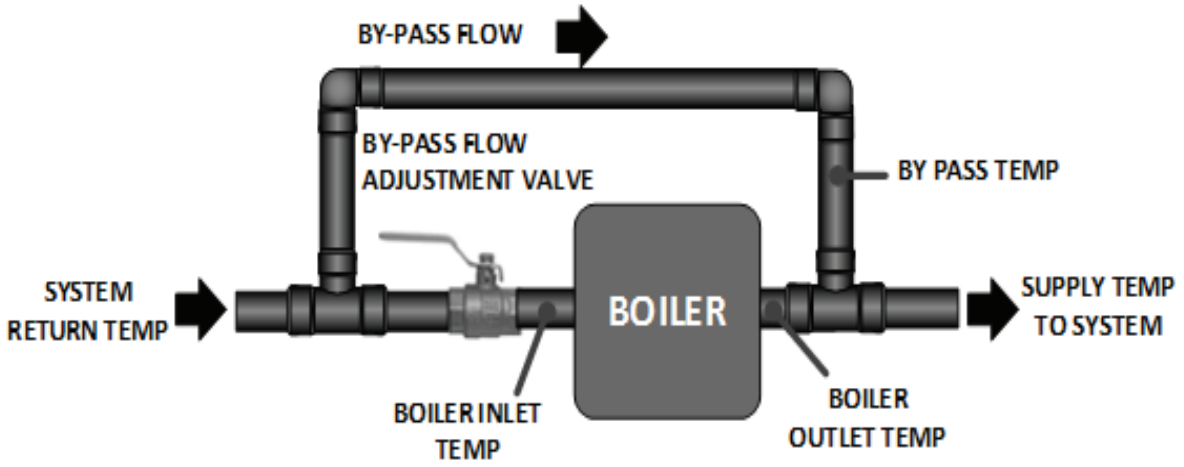

Regardless of by-pass flow, boiler will have inlet temperatures that are same as system return temperature. When boiler inlet temperatures fall below 120°F, boiler will condensate. As by-pass flow is increased, less water flows through boiler which increases boiler temperature rise. This will help reduce propensity for condensation but will not stop it.

The problem with these fixed by-pass arrangements is just that. They are fixed. As flow changes with different zones opening or water temperatures change, a simple by-pass system cannot react since it is fixed.

Appendix: Low Return Water Temperatures *(continued)*

Primary-Secondary Pumping:

This is an improvement over simple by-pass piping to reduce condensation. Again this is a fixed system. It can not adapt to variations in temperature and flow.

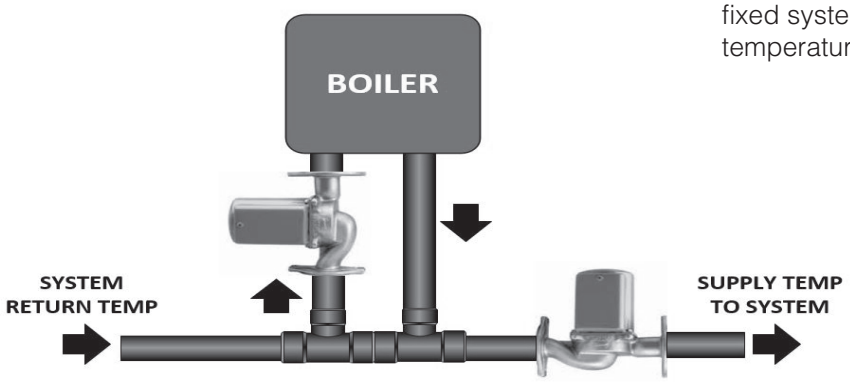

Best Alternative: U.S. Boiler offers a system by-pass kit [part number 107795-01] that addresses these situations.

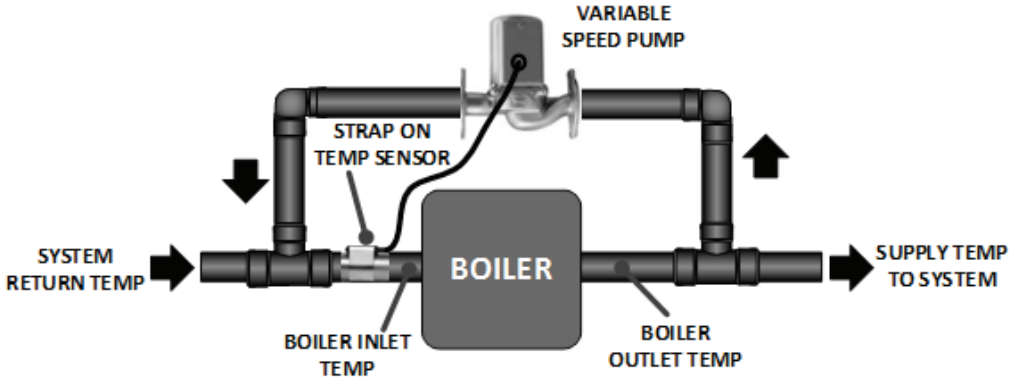

A strap on temperature sensor measures boiler inlet temperatures. This temperature signal is sent to a variable speed pump that will ensure boiler inlet temperatures are always greater than the factory by-pass kit set point of 120°F.

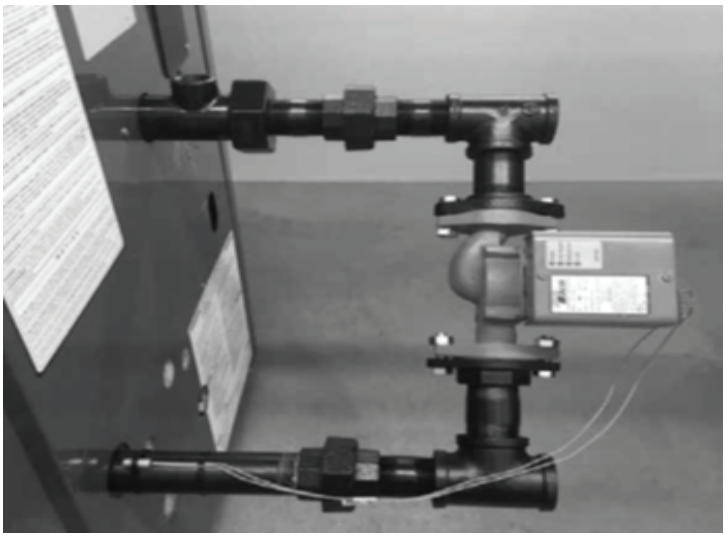

Kit includes all fittings, pump, sensor and instructions.

SERVICE RECORD

DATE SERVICE PERFORMED

SERVICE RECORD

DATE SERVICE PERFORMED

SERVICE RECORD

DATE SERVICE PERFORMED

U.S. Boiler Company, Inc.
P.O. Box 3020
Lancaster, PA 17604
1-888-432-8887
www.usboiler.net